Low-Power FM Transmitters

Join the growing ranks of clandestine radio broadcasters, and perhaps stay in the good graces of the FCC as well.

ANDREW YODER

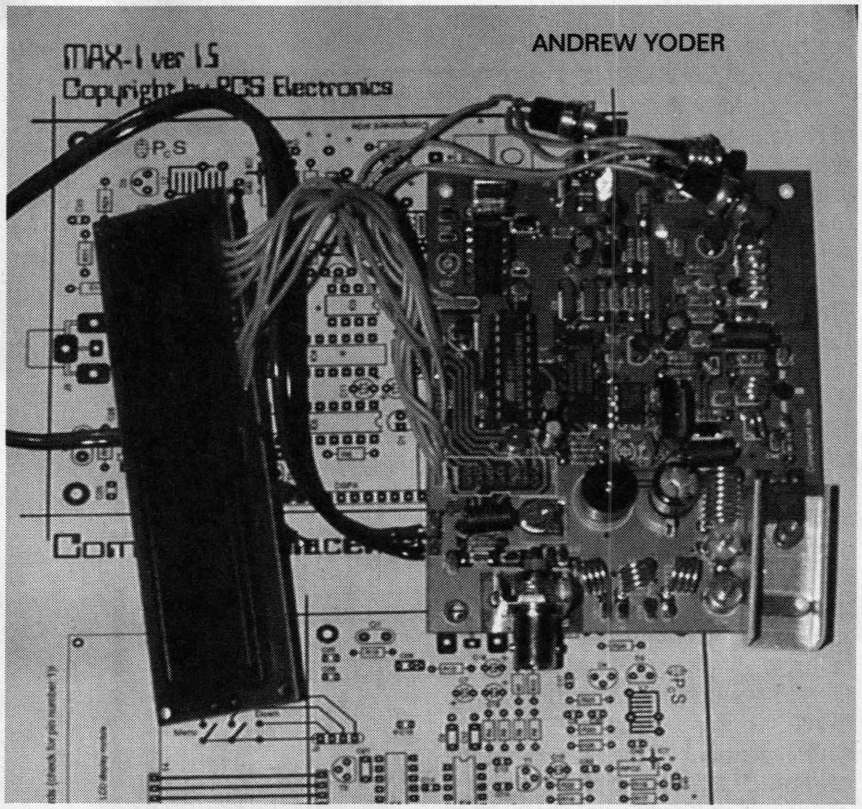

For decades, the concept of low-power radio was held in check by technical barriers. Those favorable to the concept were told by those in commercial broadcasting that the transmitting and audio equipment were too expensive. End of story. Most of these radio enthusiasts had no technical background and were mesmerized simply by the notion of impressing their audio on the radio spectrum. To these and most other "normal" people, radio is still less a science than alchemy—using engineering voodoo to convert sound into radio signals.

During this time, most of the low-power or pirate stations that began broadcasting were operated by electronics hobbyists or radio-station engineers. The good thing about that is that it makes for less interference when radio transmitters are operated by those with a technical background. But, unfortunately, most radio engineers are more interested in signal quality than in the material that is actually being broadcast. As a result, until the mid- to late-1980s, most of these hobbyist stations offered little aside from the mainstream music that was already getting airplay on commercial stations. Rare was the station that combined capable engineering with creative on-air material.

A Change in the Air. In the mid-1980s, technological improvements finally helped bring about an awareness that owning a little broadcast station wasn't entirely out of the grasp of the common person. The key was the "stereo transmitter in a chip" ICs—such as the BA1404—that came on the market. By the late 1980s, not only were such ICs readily available, but they were manufactured and distributed in such quantity that they were quite inexpensive.

The availability of relatively simple and inexpensive electronics soon translated into kits that were manufactured and sold by a variety of entrepreneurs. At first, nearly all of the kits sold were simple, inexpensive units, intended only for bugging and wireless-music applications. But hobbyists bought thousands of the transmitters, often modifying the equipment for improved audio response, frequency stability, and increased output power. This desire for better, more powerful units did not go unnoticed by the manufacturers. The only hindrance was the Federal Communications Commission (FCC), which tended to confiscate and destroy equipment that could be used for pirate broadcasting or unlicensed two-way communications.

Some groups, most notably Free Radio Berkeley, decided that selling higher-powered transmitters and amplifiers was worth the risk. The fact that the FCC was already tied up in court with FRB also helped matters, providing a sort of buffer zone against possible equipment confiscation. Other electronics kits providers, such as Ramsey Electronics and Pan-Com International, played strictly by the book, offering high-quality, but legal-powered equipment.

ABOUT THE AUTHOR

Andrew Yoder publishes *Hobby Broadcasting* magazine. He has also written the following books about pirate radio: *Pirate Radio Stations*, *Pirate Radio*, and *Pirate Radio Operations*. He can be contacted at: ayoder@cvn.net or P.O. Box 642, Mont Alto, PA 17237.

Although selling transmitters that operate above the Part-15 limits might cause unhealthy risks in the United States for retailers, those outside of the States do not have to face the FCC's wrath. That "loophole" allowed some companies such as Veronica Electronics and Broadcast Warehouse (United Kingdom) and PCS Electronics (Central Europe) to begin channeling high-quality, high-powered transmitter and amplifier kits.

Because of those factors, literally hundreds of low-power FM stations and pirates started broadcasting in the mid-1990s. And as more equipment sold, the demand for the equipment increased.

Transmitters, the FCC, and the Law. Ever since the beginning of radio, people have justified unlicensed broadcasting with a variety of excuses. Some have attempted to cloak themselves with the First Amendment. Others have stated that the FCC can only control interstate communications, not intrastate (within state) communications (this argument seems to have some validity, but the deciding factor appears to be whether or not the state wants to allow the FCC to control communications within its state). Finally, others have simply dismissed the concept that any organization has the right to control the airwaves.

Whatever justification was used to violate the rules, The Communications Act of 1996 eased the moral consciences of many who flipped the switch on unlicensed transmitters. That law relaxed ownership regulations to the point where few privately owned commercial stations currently exist in the United States—most are owned by corporations that have a grasp on other media outlets. The bland output across the radio spectrum combined with the gnawing realization that the media elite control the airwaves pushed many otherwise law-conscious citizens into the pirate camp.

Facing considerable criticisms from the public and private sector alike, the FCC began to look at proposals for legalized low-power FM broadcasting in 1998. In January 1999, the FCC announced that they were interested in comments on a two-tiered low-powered FM plan. They also announced that those who had broadcast without a license would not be shown any favoritism—if anything, they would find the licensing struggle more difficult.

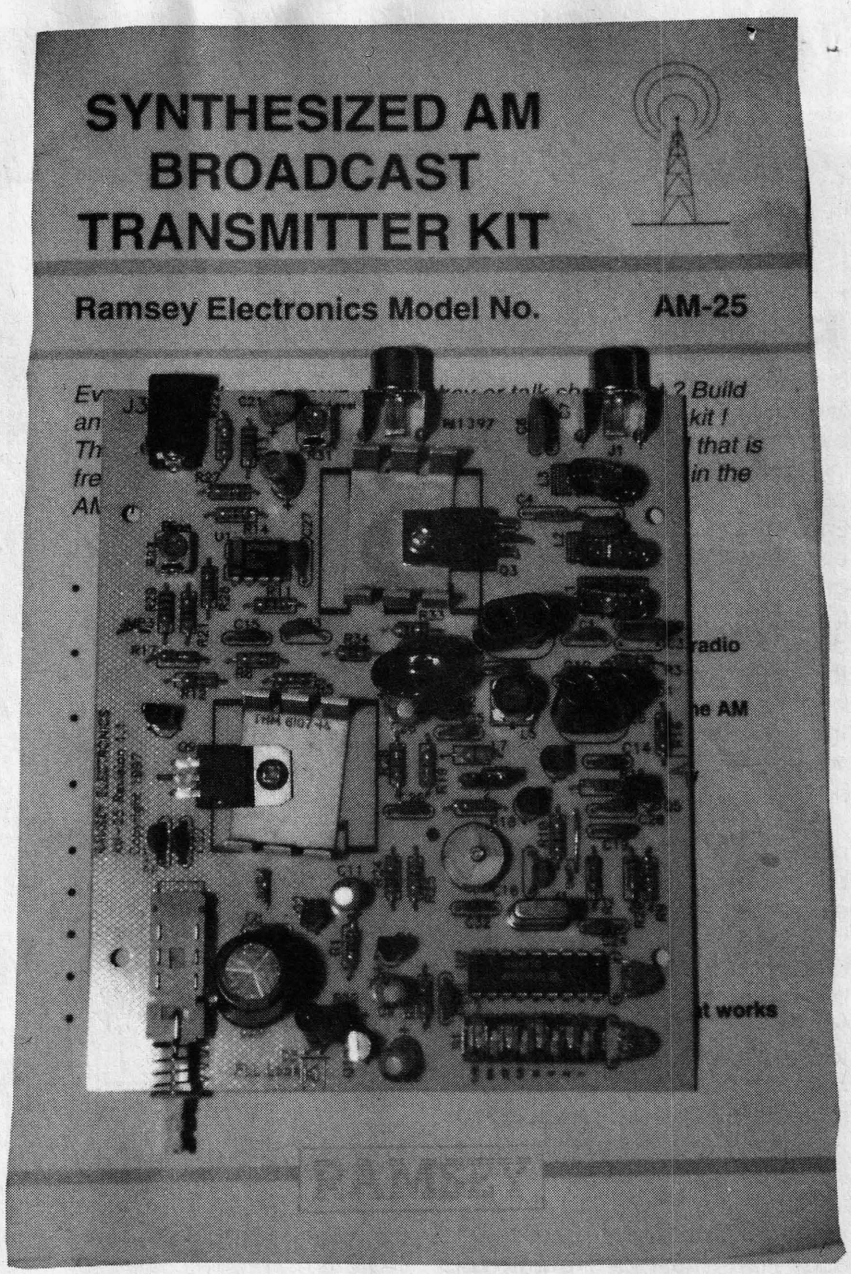

The Ramsey Electronics AM-25 is a low-power AM transmitter with a fully synthesized VFO; its output frequency can be controlled by a series of DIP switches.

LPFM Transmitters and The Present. With the FCC considering a new low-power FM broadcasting band, current pirates and those who are up-and-coming are faced with a dilemma. If they stay off the air to comply with the FCC, they could lose all momentum with their staff and audience. If the FCC never does ratify the low-power broadcasting band or spends more than a year approving legislation, the "station" might not have enough audience or staff to get back on the air. On the other hand, broadcasting at this time could jeopardize any chance at getting a license later on.

So, what are the other options? Aside from converting to Internet radio, the only way to stay on the air legally is to purchase a Part-15

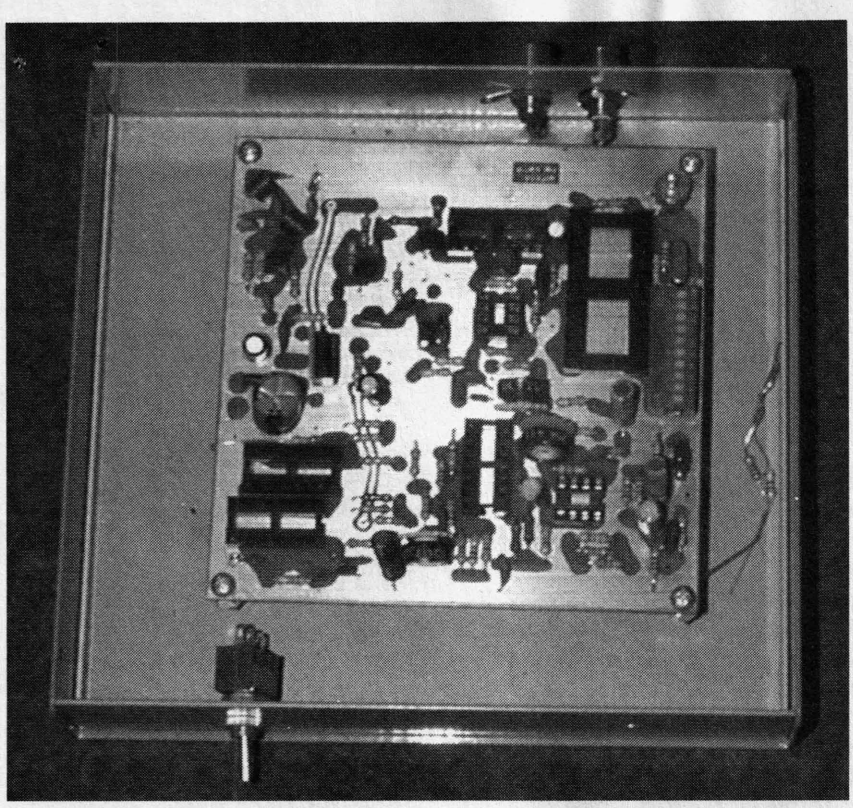

The MPX96 from North Country Radio is a basic Part-15 transmitter, but it does offer a synthesized PLL for frequency control, on-board audio generator for testing, and RF output filters. A one-watt version is sold for export only.

compliant transmitter and operate with very low power. A number of these transmitters are available—especially from American kit companies, which are especially conscious of the Part-15 regulations. Another option is to purchase a higher-powered transmitter from one of the European companies and attenuate its output power to stay within Part-15 limits. The advantage here is that if the FCC creates some LPFM legislation, then the transmitter will be ready to go at higher power. But the nature of Part 15 makes that a very iffy proposition.

For example, one peculiarity of the FCC's Part-15 rules is that no specifications are given for output power. Part 15 relates only to unintended interference emitted from an electronic device. For example, the interference that your computer monitor can emit is limited by Part 15. Obviously, your monitor has no radio output, so the interference rating can't be given in output power. Instead, the rating is in millivolts-per-meter, which is the signal strength at a particular distance away from whatever is emitting the signal.

While such a specification is fine for unintentional radiators, it makes life very difficult for anyone trying to comply with Part 15 with a broadcast station. The big problem is in making the measurements. It requires that you have specialized test equipment, an RF millivoltmeter, in particular. The least-expensive millivoltmeter that I've found to date is available from Ramsey Electronics and costs $695. That's more than most personal broadcasters can afford.

Because of that and other Part-15 issues, most personal broadcasters in this country avoid the details and simply purchase Part-15 compliant transmitters and run them with the specified power input and antenna. One advantage of that approach is that the FCC has generally been more flexible with very low-powered FM broadcasters. Part-15 stations are very rarely visited by the FCC; most FM stations running higher power are typically warned, not immediately fined. On the other hand, this is not an invitation to violate FCC rules—if the FCC believes that you are violating their rules (especially if you are believed to be doing so on purpose), they could choose to confiscate equipment, levy a fine, or take you to trial.

In short, operating within Part-15 limits depends entirely on the end results, not on the equipment that is used to achieve them. If you have any questions, contact the FCC before taking any actions.

Part-15 Transmitters. A number of companies produce "home broadcaster" and FM-bug or telephone-bug kits. Although these units might be capable of transmitting a signal, few are in stereo (let alone, offer good stereo separation) and will not be discussed here. Instead, we will focus on what we consider to be "broadcast-quality" transmitters. The term "broadcast quality" is used here to represent transmitters that are intended for amateur broadcasting and have better general specifications than other hobbyist kits. It is not used to convey FCC type acceptance for broadcasting on the FM-broadcast band.

One of the oldest existing electronics kit manufacturers in the United States is Ramsey Electronics, which offers hundreds of different kits for a wide variety of hobbyist and professional applications, including hobby broadcasting. The flagship transmitters of the Ramsey line are the FM-100 stereo FM transmitter and the AM-25 AM transmitter. The FM-100 is an FM transmitter packed with extra features: audio peak limiters, digital readout with up/down frequency buttons, audio-level meters, and a built-in mixer! The AM-25 is much more basic: a low-power AM transmitter with a fully synthesized VFO; its output frequency can be controlled by a series of DIP switches. Ramsey also offers other hobbyist equipment, such as an amplifier, receivers, two lesser FM transmitters, antennas, a mixer, and more.

Pan-Com International, a division of Panaxis Productions, has been advertising the concept of "your own radio station" longer than probably anyone. Their flagship transmitter is fairly basic, but for

an extra $75 you can upgrade it with an LCD that displays the output frequency and station call letters! Panaxis also offers accessories, including filters, amplifiers, antennas, etc. Panaxis used to sell many of its own kits, but now it distributes equipment for a number of other companies.

North Country Radio is the "newcomer" on the American scene, although the company has been operating since 1986. NCR should be well known by **Electronics Now** readers because their two major hobby broadcasting transmitters, the MPX96 and the AM88, were both featured on our cover. MPX96 is a basic Part-15 transmitter, but it does offer a synthesized PLL for frequency control, on-board audio generator for testing, and RF output filters. A one-watt version is sold for export only. The AM88 is a frequency-synthesized transmitter for the AM band. It features an audio limiter to prevent overmodulation.

Higher-Powered FM Transmitters. Hobbyists interested in domestic equipment can acquire it from Free Radio Berkeley. FRB is best known for its unlicensed broadcasting and subsequent court case in California. However, it also manufactures and sells a variety of broadcasting kits. Because of the higher power levels, FRB warns that the transmitters are "for educational purposes only" and that they must only be operated "into a dummy load." The mainstay of the FRB equipment is their digital PLL transmitter. FRB also manufactures amplifiers rated at approximately 1, 6, 15, 20, 25, and 35 watts. On alt.radio.pirate, some enthusiasts have complained about missing parts and slow service from FRB, so those interested in purchasing FRB equipment sometimes go through a third-party vendor.

Nearly all of the companies profiled in this article are general electronics-kit providers that began manufacturing transmitters once the need arose. Veronica Kits from the UK is the first company to dedicate itself entirely to low-power FM equipment. Veronica offers four different transmitter kits and seven different assembled transmitters (ranging in power from 1- to 150-watts output). To round out the catalog, Veronica also sells limiters, power amplifiers, stereo encoders, antennas, and power supplies. Like Free Radio Berkeley, none of the Veronica equipment has names—it's all simply listed by power and/or function. Veronica equipment is designed to meet the more-stringent demands of professional applications, so it is highly regarded in the hobbyist arena.

From the end-user's perspective, Broadcast Warehouse is almost like a clone of Veronica; both companies are from England, both specialize in low-power FM kits and pre-assembled equipment, neither have names for their different models, and both companies are highly regarded. The flagship Broadcast Warehouse transmitter is their one-watt PLL unit. Like the Panaxis FMX transmitter, it also features an LCD display for frequency control. Broadcast Warehouse also sells an interesting variety of accessories, including a limiter, two stereo encoders, and even an RDS encoder so that stations can transmit digital messages that can be viewed on RDS-capable receivers while broadcasting programming.

PCS Electronics takes a different approach from all of the other transmitter manufacturers. Rather than stating that the equipment is for "educational" or for "professional" uses, the PCS Website touts their MAX series as "pirate-radio transmitters." The core of equipment from PCS Electronics is the MAX-1 FM transmitter, which is rated at three to five watts and includes an LCD readout. The readout does more than just show the frequency or call sign—it actually displays tuning errors for such problems as having too little shielding around the transmitter (RF feedback). The MAX-1 is available as a kit, tested, with two different power supplies, with a 20-watt amplifier, and with a variety of different enclosures. Interestingly, PCS makes no mention of its address, telephone or fax numbers, or even general location. Evidently, most of its business occurs through the Internet or distributor sales.

NAMES AND NUMBERS

Broadcast Warehouse
P.O. Box 697
Wallington
Surrey SM6 7ZR
UK
Tel: +44 181 2880192
Web: www.broadcast-warehouse.com/

Free Radio Berkeley
1442 A Walnut Street
Berkeley, CA 94709
Voice Mail: 510-464-3041
Web: www.freeradio.org/index.shtml

Hobby Broadcasting Magazine
P.O. Box 642
Mont Alto, PA 17237
Web: www.frn.net/rfi

North Country Radio
P.O. Box 53
Wykagyl Station
New Rochelle, NY 10804-0053
Tel: 914-235-6611
Fax: 914-576-6051
Web: www.northcountryradio.com/

Pan-Com International
PO Box 130
Paradise, CA 95967-0130
Tel: 530-534-0417
Web: www.panaxis.com/

PCS Electronics
Web: kiss.uni-lj.si/~k4mo0018

Ramsey Electronics
793 Canning Parkway
Victor, NY 14564
Tel: 800-446-2295
Fax: 716-924-4555
Web: www.ramseyelectronics.com/

Veronica Kits
Unit 5/6 1A Sandbeds/Albert Rd.
Queensbury, Bradford BD13 1AF
UK
Web: www.veronica.co.uk/

Choosing the Right Equipment. Aside from making conclusions based simply on power levels and price, future purchasers of equipment should also consider the performance and special features that are included in the package. For example, the built-in mixer, limiter, and audio meters might sway the mobile broadcaster toward the Ramsey FM-100. Or the combination of built-in troubleshooting, power and low price might convince an enthusiast toward purchasing a PCS Electronics MAX-1.

(Continued on page 87)

vice/repair technicians.

More than 215 new products have been added, including new lines of test equipment by Fluke and BK Precision, semiconductors by Teccor, 3M anti-static equipment, and industrial analog meters by Triplett. There are also expanded product lines by Tempest, Pomona, MondoTronics, and Hanlong. The entire catalog is available on line.

Grounding and Shielding Techniques, 4th Edition

by Ralph Morrison
John Wiley & Sons
605 Third Avenue
New York, NY 10158
Tel: 212-850-6336
Web: www.wiley.com
$64.95

Over the past decade, the rapid growth of digital technology has brought the analog world into direct contact with high-speed operations and electro-magnetic processes—and created new problems for designers. The fourth edition of this book is entirely rewritten to reflect these challenges. This volume deals specifically with the new interference

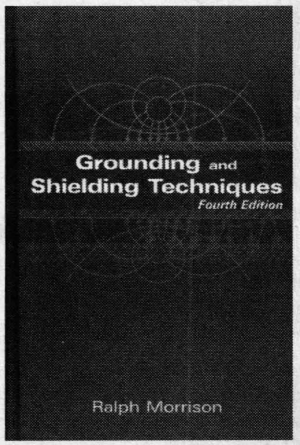

CIRCLE 342 ON FREE INFORMATION CARD

problems created when analog designs are buried in the middle of hardware that must meet radiation and susceptibility standards.

Topics covered include effective techniques for handling noise problems, strategies for reducing or eliminating noise in interconnecting systems, an expanded discussion of multishielded transformers, and an overview of current trends to limit the use of transformers. The book features real-world examples of factors influencing electronic noise, practical explanations of the physics of fields, numerous illustrations, and a clear, readable text.

Programming and Customizing the Basic Stamp Computer

by Scott Edwards
McGraw Hill
1221 Avenue of the Americas
New York, NY 10020
Tel: 800-2MCGRAW
Web: www.ee.mcgraw-hill.com
$34.95

This guide provides a comprehensive tutorial on the easy-to-use BASIC Stamp single-board computer, which runs a PIC microcontroller and doesn't require any assembly language programming. Starting with a primer on basic electronics, including reading schematics, identifying components, and constructing prototypes, the author goes on to a thorough coverage of both BASIC Stamp I and II—from reading and

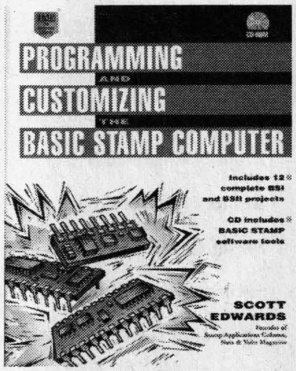

CIRCLE 343 ON FREE INFORMATION CARD

understanding BASIC programs to PBASIC toolboxes to detailed applications. There is also a BASIC Stamp Quick Reference Guide.

Twelve complete projects demonstrate various BASIC Stamp applications. An accompanying CD provides all the software tools needed to begin developing PIC applications.

BooksNow To order books in this magazine or, any book in print. Please call anytime day or night: **(800) BOOKS-NOW (266-5766)** or (801) 261-1187 ask for ext. 1454 or visit on the web at **http://www.BooksNow.com/electronicsnow.htm**.

Free catalogs are *not* available.

Newnes Windows 98 Pocket Book

by Ian Sinclair
Newnes, Butterworth Heinemann
225 Wildwood Avenue
Woburn, MA 01801
Tel: 800-366-2665 or 781-904-2500
Fax: 800-446-6250 or 781-904-2620
Web: www.bh.com/newnes
$29.95

CIRCLE 344 ON FREE INFORMATION CARD

Ideal for a wide range of readers (from the less experienced users to those who want to get more out of their computers), this book offers an introduction to Windows 98. It covers all aspects of the operating system, accessories, and utilities. The use of DOS from Windows is explained, along with the diagnostic and error-correcting tools of Windows 98. EN

LOW-POWER TRANSMITTERS

(continued from page 40)

Or, do the quality of the Veronica and Broadcast Warehouse transmitters make their choice a necessity?

So, where do you turn for help? One place is *Hobby Broadcasting* magazine, which regularly publishes FM transmitter reviews. The FRN Grapevine (www.frn.net/vines) features an FM bulletin board and chat room, with plenty of enthusiasts who are more than happy to voice their opinions concerning transmitters. Also, the Usenet group alt.radio.pirate is frequented by many active participants—both legal Part-15 station operators and those who choose to broadcast above the legal limits.

Those with the greatest impact on choosing a transmitter and putting it on the air, ironically, have no interest in broadcasting. The FCC, who has complete control over the broadcasting bands, consists of appointed officials, not radio hobbyists or even elected candidates. The FCC could open a new broadcasting band or change the low-power specifications at any time. To keep abreast of the current news in low-power broadcasting, see any of the information sources mentioned above or visit the FCC Web page at: www.fcc.gov. Ω

Stirling M. Olberg W1SNN/WR1AJE
19 Loretta Road
Waltham MA

The Challenge Of 10.5 GHz

—use it or lose it to Smokey

The reader interest in this series of microwave-oriented projects has been tremendous. Stirling indicated in a letter to 73 that he has been flooded with requests for additional information relating to the original "Smokey Detector" article (73, Holiday, *1976). Please bear in mind that experimenting with UHF and microwave devices requires restraints not required at lower frequencies. There is considerable evidence that microwave radiation, even at very low levels, can have strange physical effects. Research in this area is continuing, so, for the present time, play it safe. Under NO circumstances look into the horn of an operating microwave transmitter. Heating of the inner eye may occur, causing sight impairment. Do not direct the beam at other persons. Allow common sense to prevail while experimenting with microwaves. The* New Yorker Magazine *published an article ("The Roving Reporter — Microwaves," Dec. 13 and 20, 1976) concerning the research into the possible effects of microwave radiation. Read it. — Ed.*

Photo A. The tuning screws and modulator diode are shown in a different position from that described in the text. These components may be located in either position, but the detector diode must be fed as shown to allow access to the tuning screws.

The smokey detector[1] was presented to drivers for, among other things, the safety value it presented. It was intended to provide a radar warning and therefore slow the driver down to a safe speed.

There are many possible options for modifications of this device for the smokey constructor who uses his imagination. I have received a lot of letters asking how to incorporate them.

One very fine idea came from Wayne W2NSD. He suggested that the smokey detector have an oscillator which would operate on X-band incorporated into the design. This addition, with suitable circuitry, would make it a transceiver. It will also do many more things that can provide some amusing effects. This single addition was the subject of many requests for a how-to-do-it circuit.

The addition will make the unit into a transceiver and Doppler radar. In fact, the addition of the oscillator will make it exactly like the rf head of surveillance radars used in traffic control.

Other letters indicated an interest in a variable-frequency modulator oscillator giving a range of 300 to 2000 Hz. I even had one request for the addition of the Trekkie circuit, so the Starfleet of the UFPCC could be contacted.

Let's get on with the circuit additions by examining the electronics first. You will see that the primary circuit, consisting of the smokey de-

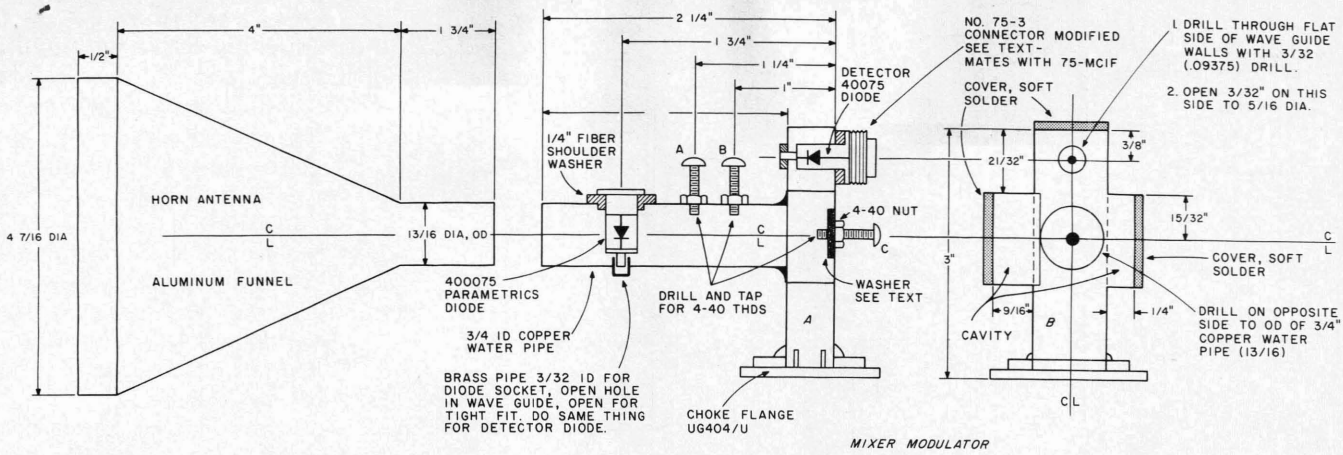

Fig. 1. The mixer modulator. Materials: 4-7/16" diameter funnel; ½" x 1" copper waveguide — RG-52/U.

tector preamplifier, is still incorporated. The amplifier is roughly the same circuit, except that it consists of integrated circuits, occupying a much smaller space.

Also, this unit is more easily adapted to serve as part of the transceiver modulator. The microphone incorporated is a standard CB mike which has a switch that is push-button operated to do the many functions required in a CB transceiver. This switch blends nicely into the transceiver, and, best of all, it's inexpensive.

Now examine the function switch, S3. You can see that it serves to shift the unit from duty as a transceiver to performance as a Doppler radar or smokey alarm. Note that, when in the alarm position, a variable oscillator at audio rates should meet the requirements of the variable-frequency modulator enthusiasts. Note also that the control switch for this circuit, a 3-position switch, allows it to modulate the diode with a "bee baw" frequency response, a wailing sound familiar to all of us, and, of course, most importantly, a variable-frequency oscillator at the audio rate of 300 to 3925 Hz.

This oscillator may be calibrated in its frequency range, but, for better reference, the dial can be directly marked in miles per hour by dividing the frequency output of the oscillator by the one mph Doppler frequency,[2] 31.4 Hz. The variable-frequency oscillator pot dial will then be calibrated from 9.5 to 125 mph.

In the Doppler radar function position, the Doppler sounds of vehicles moving toward or away from the antenna will be easily recognized as a beat that rises in frequency when a vehicle approaches and drops in frequency when the vehicle recedes.

Many other sounds, such as aircraft and large ships, can also be detected. A helicopter can be heard quite a while before it can be seen. This technique is used as an intruder alarm in many burglar warning systems.

In the Starfleet warning position, Trekkies[2] will, of course, be able to carry on their communications with one another simply by turning the switch to that position and pressing the mike button, which momentarily sends the ID signal.

In the transceive position, speech modulation is applied to the Gunn effect diode oscillator. The level of modulation is controlled by the audio amplifier volume control. The speaker is disabled so that no feedback will exist. Note also that an audio jack is incorporated so that the signals for any function can be directed into the car stereo or two meter audio system. When this option is used, the speaker switch, S4, must be turned off.

Note that a voltage regulator is shown for the Gunn oscillator. This is a three-terminal regulator and should not be left out in favor of some lesser regulator system. Failure of the diode will surely bring forth new expletives, since the diode costs approximately $25. A second protective circuit is made up of a low-voltage, high-current diode connected after the fuse. If primary voltage reversal occurs, this diode will blow the fuse before most of the semiconductors are ruined.

A tune-up aid, consisting

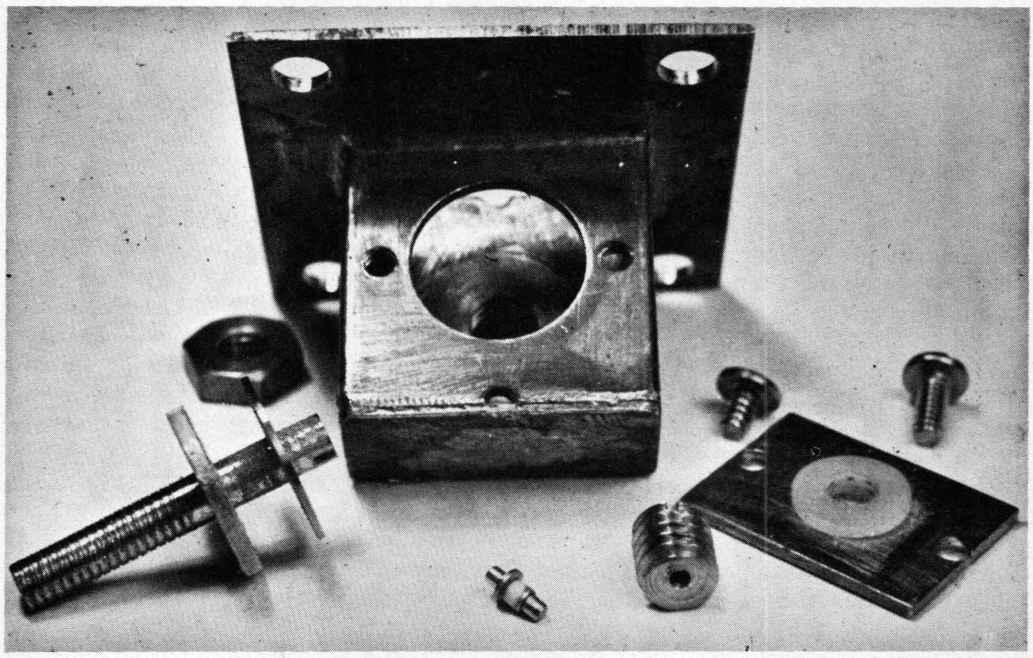

Photo B. Gunn effect oscillator assembly parts. Not shown is the cover iris to the waveguide flange.

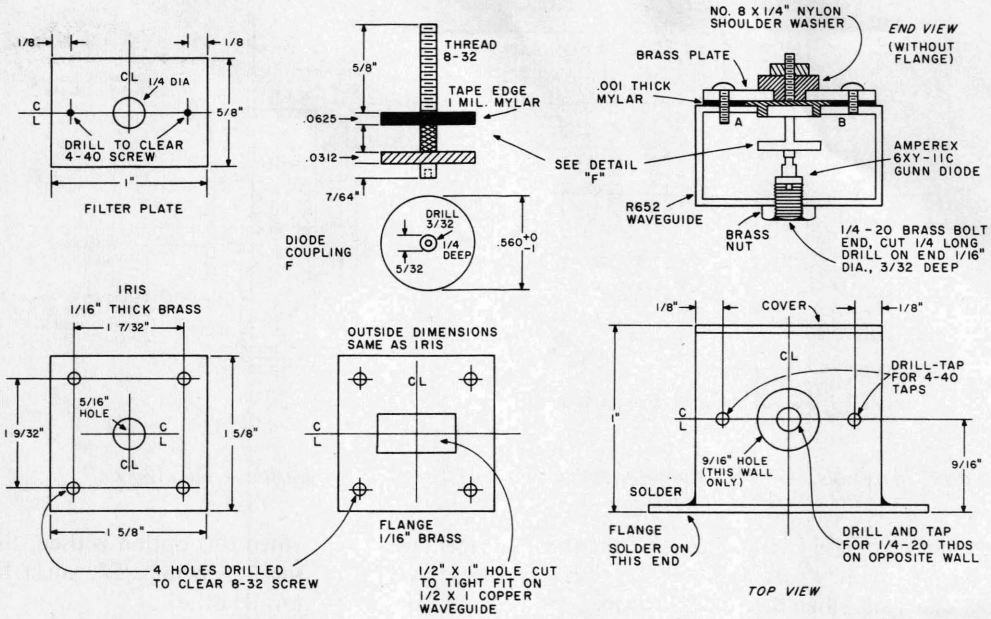

Fig. 2. Gunn diode oscillator for 10 GHz.

of a microwave diode connected across a meter, is used in the initial tune-up and can be temporarily constructed for this purpose. A VOM and a muffin fan are all that are needed to tune this rig up.

Construction of the electronics can be done on a small piece of perfboard. Since there are no real problems in the layout other than those common to audio circuits, I will discuss the microwave plumbing, which must be fabricated by the constructor. Hand tools are all that are needed, with one exception – the diode coupling unit, which must be turned on a lathe.

The horn for this unit is made from an aluminum funnel of the approximate dimensions shown in Fig. 1. The throat of the funnel must be broached out to take the taper out of it. Funnels of this size can be obtained from a farm supply dealer and are primarily used in dairies. I broached mine to shape with a 13/16-diameter rod stuffed down the funnel throat gently tapping the rod with a hammer. It's easier than you think, but care must be used or the metal will tear. When the broaching is completed, the throat of the funnel will slide over the outside diameter of the 3/4" i.d. copper water pipe section used as the diode modulator and circular waveguide to rectangular guide adapter shown in Fig. 1(a), the mixer modulator.

To construct the mixer modulator plumbing, start by cutting off a section of RG-52 waveguide so that each end is square and deburred. Lay out the holes as shown in Fig. 1(b). Drill the two sets of holes by first running a number 43 drill in each location shown, through both walls. These holes will serve as pilot holes for further drilling of larger holes and, therefore, should be drilled carefully so that the holes are directly in line with each other.

Open the holes, as shown in Fig. 1(b). Deburr each hole, and then open and tap for threads, as shown in Fig. 1(a). Solder in place small sections of 3/32" i.d. pipe to serve as sockets for the ends of the Parametrics 400075 Schottky diodes. This pipe is obtainable at model shops. Do the same thing for the detector diode. Locate a 3/8"-diameter, 1/16"-thick brass washer that will pass a 6-32 screw on the wall of the waveguide facing the copper pipe, as shown in Fig. 1(a). Solder the washer in place so that it is concentric with the screw. Complete drilling all holes as shown in Fig. 1(a) on the copper pipe. Complete tapping all holes on the pipe. Lay this piece aside for the moment.

Measure off the two openings shown for the waveguide cavities on the ½-inch wall of the waveguide section you just drilled. Carefully and squarely saw through the walls so that the saw cuts just break through the sidewall metal. Then file the edges between these cuts until the flats fall away. Level these cuts off so that the thickness of the sidewall is exposed. Next, cut two small pieces of waveguide, as shown, for the sidewall cavities. Cut these square, and deburr them. Clean all surfaces with "Brite Dip" or soldering acid. Now assemble the sidewall cavities, as shown, and hold them in place with a C-clamp. Be sure to place the ½ x 1-inch covers under the C-clamp, and soft-solder all parts in place. Next, place a flange (choke-type UG-404/U) on the waveguide end shown in Fig. 1(a). Be sure it is square with the vertical wall. Then solder it in place. Put a ½ x 1-inch cover plate on the opposite end, and solder it into place.

Modify an Amphenol #75-3 microphone connector by sawing off the small-threaded end so that it is flush with the large-threaded end. Lap this cut smooth, carefully drill out the eyelet in the insulated end, and open the eyelet mounting to 1/4-inch diameter or to clear the detector diode. Carefully solder this piece on the wall of the waveguide designated for the detector diode. Make a dummy diode or use a burned out diode to align this holder square.

Now mount the copper pipe in the hole on the wide wall of the guide as shown in Fig. 1(a). Place the screws and jam nuts as shown in the drawings. Clean all solder flux from the assembly with hot water, wash them with alcohol, and dry them thoroughly.

Check all of the assembly to see that all parts are securely soldered and square with the waveguide walls. Slide the horn throat over the outside of the copper pipe now mounted on the waveguide assembly. It should look something like Photo A. Not shown is a hose clamp which holds the horn in place securely.

If you wish to build your own Gunn diode oscillator, the details are shown for this construction. It is as simple as most of the previously described plumbing. A Gunn diode, Amperex-type CXY-11-C, obtainable from North American Phillips, which costs in the vicinity of $25, is used in this assembly and is relatively low in power, but is sufficient for the job. The assembled Gunn oscillator is also shown mounted on the plumbing. Photo B shows the components required. With the assembly construction drawing and the photo, you should have no trouble constructing this.

If you wish to buy the Gunn oscillator assembly, it is available from Microwave Associates or General Electric. The units used for this purpose are usually available for police or intruder alarms and vary in price depending upon power output. If a commer-

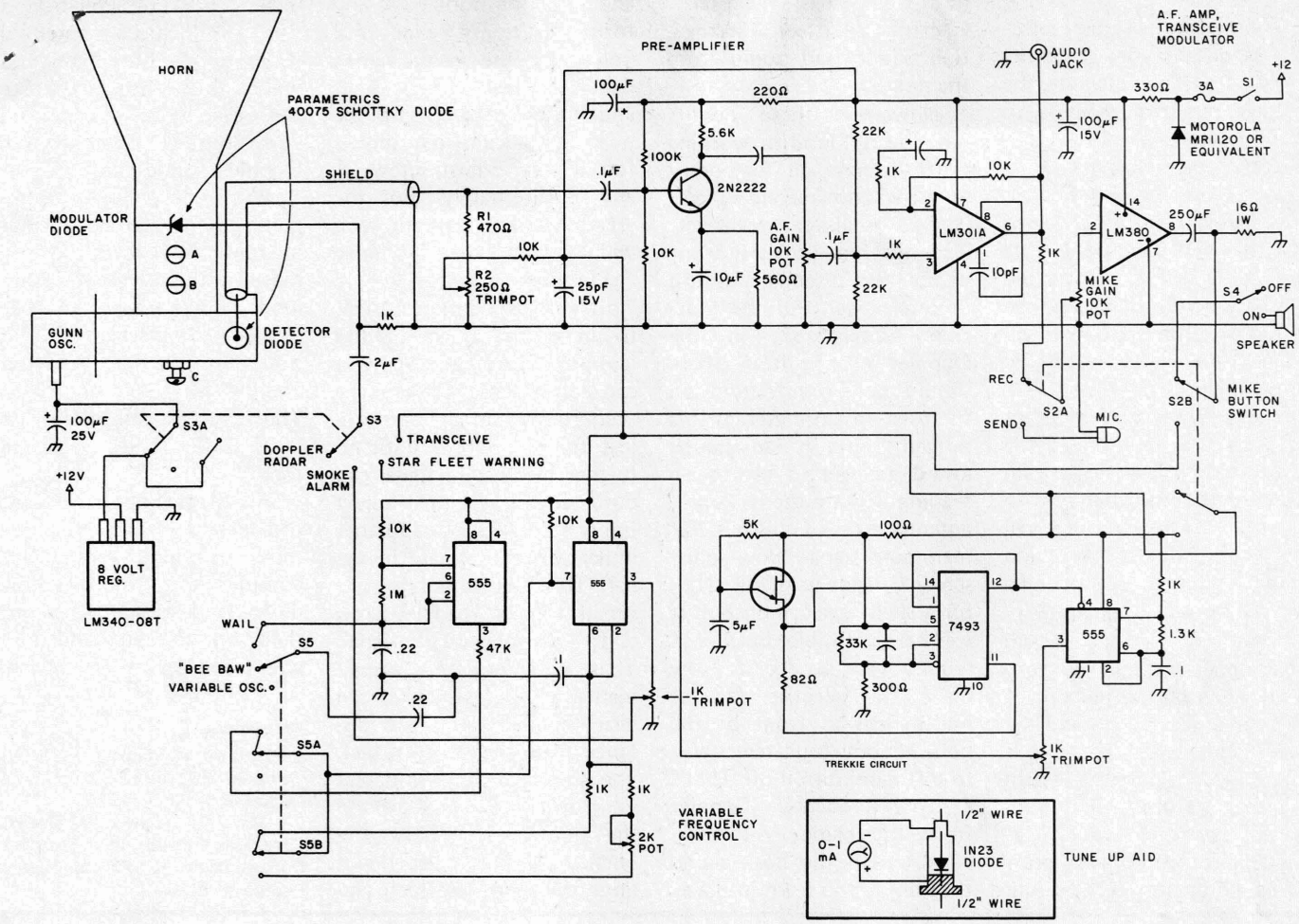

Fig. 3.

cial unit is chosen, the three-terminal regulator indicated may have to be changed to one which delivers a higher voltage. Usually a spec sheet accompanies the oscillator.

As a last resort, if a Gunn oscillator is beyond your means, a Klystron oscillator can be used. Suitable information on these tubes, as well as power supply information, is available in amateur handbooks.

The construction of a Gunn oscillator is accomplished as follows:

There are two views given for a Gunn oscillator that should occupy your attention. (See Fig. 2.) These show the top view, with a flange in place, and the end view, with the flange absent. The flange was purposely left off so that the assembly of components and mounting screws would be in view. The two screws marked A and B in this view serve an obvious double purpose. The B screw is a 4-40 x ¼-inch-long brass screw and should be set in place so that it is not protruding into the waveguide. If it does, file it until it just fills the hole and is flush with the inside of the guide. The A screw is 3/8-inch long and of the same material. It sets the frequency of the oscillator. Making it longer will lower the frequency, and, conversely, shortening it will raise it.

The insulating material for the diode coupling unit should be mylar, but other material can be substituted.

When installing the diode, mount it in the hole of the short 1-20 brass plug with the large flange of the diode on the plug. Screw the plug into place so that the other end of the diode engages the diode coupling firmly, but do not compress this $25-dollar jewel, or the diode will be destroyed by cracking. Just a firm clamp will do.

As shown in the top view, all holes should be drilled and tapped and the cover and flange attached with soft solder. For drilling and soldering, use the same techniques as described in the plumbing assembly.

The diode coupling should be turned on a lathe and should adhere to the dimensions as shown. If you are ambitious enough, you could make this unit with a screw and washers. The edge of the top section of this unit must be insulated with mylar tape. A 1-mil thickness is required. It can be obtained from a drafting supply house or perhaps from a friendly draftsman. Use another piece of the same tape over the top of the guide to insulate the top of the diode coupling from the filter plate which is gounded to the waveguide. This plate provides the other half of an rf capacitor in conjunction with the top of the diode coupling.

When all of the parts are assembled, including the diode, place the iris over the flange. Be sure the holes all align. They are drilled to fit the choke flange on the plumbing assembly and are not uniformly spaced, so there will be no possibility of crossguiding the two units.

Crossguiding will absolutely put you out of business and may even blow your diode. The microwave industry thought of this years ago, so that's why the commercial chokes and flanges are drilled this way — not because I thought of it.

So now let's get on with the tune-up procedure. I said in the beginning that all you were going to need was the tuning meter and diode shown in the drawings and an

electric fan.

Temporarily disconnect the lead that goes from the Gunn diode oscillator to the voltage regulator. Now, with the power on (12 volts), check to see that the regulator is putting out 8 volts positive. If it is, then check to see that a voltage of at least 100 millivolts dc is indicated at the junction of R1 and the detector diode. If it is lower than 100 mV, raise it by adjusting R2, the trimpot.

Next, connect a temporary lead to the junction of the connection to the mike gain pot and the lead that goes to the mike. Now you can signal trace the "bee baw" and "wail" circuits by touching the wire to the connection on switch S3, smoke alarm position. It should be very loud when the output pot of this circuit is full on and the mike gain pot is up. Now, if all is well with the alarm circuits, connect the temporary wire to the Starfleet warning position, and press the mike button. You should hear two things — the characteristic Starfleet interrogation sound and audio from the mike.

Now that these circuits have been found in working order, remove all temporary jumpers and reconnect the Gunn oscillator regulator. Place the tune-up aid in front of the horn antenna, and turn on the power. Put the function switch, S3, in the Doppler radar position. There should be an indication on the tune-up aid meter. If it is pegged, move it far enough away to get a half-scale reading. Rotate the pickup or antenna leads of this unit for maximum signal. Now adjust screw C, shown in Fig. 1(a), for a slight peak in output. It will be discernible, but it will require care to see it. Now place the electric fan or muffin fan in front of the horn, about four feet away from it, and turn it on. That's a low-frequency Doppler from the blades you hear. Now loosen the hose clamp that holds the horn in place, and slide the horn back and forth on the 3/4" pipe until you find the peak signal, which will also be very slight and quite broad. Clamp the horn in place when this is found, and adjust screws A and B alternately. For the greatest signal strength, you will probably have to move the fan further away.

If you can connect a VOM to the output of the LM380 and put it on an ac scale, you can adjust these screws more accurately than by ear. Adjust the two screws until no further increase in signal can be detected, and then adjust the trimpot, R2, for a further indication of increase in signal. This adjustment is very broad. Finally, readjust screw C for an increase in signal. That completes all adjustments. You probably can hear the fan at quite a distance from the horn. In fact, you should be able to detect your own movements around the horn as very low frequency sounds, dependent upon the speed at which you move around. If you have a tuning fork, strike it and hold it up to the horn, and you will be able to hear it. Or take the whole works outside, and see what automotive Dopplers sound like.

With the tune-up complete, there are no further instructions, except to say that, in the communication mode, don't expect to hear signals like on seventy-five in a contest. I'll hold skeds on 10.499 MHz on the fifth Thursday of any month at 0001 GMT. So listen for me there.

All of the other options, of course, will give you something to think about. But consider this, too — slow down, and we can keep our sked on the air, and you won't end up a silent key. ■

References

1. Stirling M. Olberg W1SNN, "Mobile Smokey Detector," *73 Magazine*, Holiday, 1976.
2. Marc I. Leavey WA3AJR, "Trekkies, Build this Starfleet Communicator," *73 Magazine*, February, 1976.

TS-520S shown with optional DG-5

18 reasons why...

Kenwood TS-520S is the best selling amateur radio today

- 160-10 M. + WWV
- 6146B Finals
- RF Attenuator
- Switchable AGC
- R.I.T. Control
- CW Sidetone
- Heater Switch
- Built in Speaker
- 25 Khz Calibrator
- Excellent Receiver Sensitivity
- Improved Speech Processor
- Effective Noise Blanker
- Provision for External Speaker
- 8 Pole Crystal Filter
- Front Panel Carrier Level Control
- Built in Cooling Fan
- Provisions for 4 Fixed Frequencies
- Extremely Low Service Record

FOR KENWOOD PRICES OR TO ORDER CALL TOLL FREE

1-800-228-4097

or in Nebraska (402) 466-8402

Communications Center

Your Discount Ham Radio Store

443 N. 48th St. Lincoln, Nebraska 68504

master charge THE INTERBANK CARD

BANKAMERICARD

C58

John M. Franke WA4WDL
1006 Westmoreland Ave., Apt. 225
Norfolk VA 23508

Can Hams Counter Police Radar?

—*electronic warfare: another step*

There is a growing interest among amateur radio operators in the development of a simple and inexpensive method to jam or otherwise defeat police radar units. This article is written to discuss the various methods I have used and to offer some suggestions for future work.

Electronic warfare is a highly-developed military science, the purpose of which is to render useless the electronic sensor and communications equipment of the enemy. This article will be limited to the narrow realm of CW Doppler radar jamming.

The best place to start is to obtain an accurate description of the hostile unit, the police radar. A block diagram of typical police radar is shown in Fig. 1. The radar consists of an unmodulated CW source, either a klystron or a solid state Gunn or Impatt oscillator, a duplexer to isolate the transmitter and receiver, a common antenna, a detector-mixer, and an audio-frequency meter. Typical transmitter output power is in the neighborhood of 10 to 100 milliwatts. The transmitter frequency is 10,525 MHz, very close to the 10,000 to 10,500 MHz amateur band. Typical antenna gain is between 10 and 20 dB.

In operation, radiation from the oscillator passes through the duplexer to the antenna, where it is radiated in a narrow beam. Energy striking cars is Doppler-shifted by an amount proportionate to the car's velocity. The reflected energy is picked up by the antenna and fed to the detector-mixer. Some of the transmitter output is mixed with the reflected signal. The detector-mixer, usually a simple point-contact diode of the 1N23 series or a hot carrier diode in the newe units, detects the differenc frequency, which is measure by the audio-frequency met and displayed as mph on meter or LED display.

An audio-frequency m is used because the Dop shift is approximately Hz per mile per hour velo or a speed of 100 mp duces a Doppler shift of Hz.

Methods of Deception

1. CW Jamming

This is the first method amateurs consider, but it is actually one of the least effective and most expensive. To use this method requires operation outside the amateur band. It also would be necessary to use a scanning

Note: Don't let that complex synthesizer fake you out. All you need is a common audio oscillator, not a laboratory generator like Fig. 2. *73* takes no stand in the developing warfare between police radar and hams interested in countermeasures. The more we read about it, the more convinced we are that police radar should be outlawed as an invasion of person by possibly damaging microwave radiation. — Ed.

HAMTRONICS USED GEAR • TEST EQUIPMENT • SPECIALS

30-DAY GUARANTEE ■ 90-DAY FULL CREDIT TRADE-IN ■ FREE SHIPPING VIA UPS ONLY

Limited quantities. First come, first served.

(if weight or size exceeds UPS max., we will ship freight collect)

Allied

AX-190 Receiver	$159

Ameco

PV-50	$ 9
CN-50	29
CN-144	39
TX-62	79
621 VFO	45

B&W Waters

Nuvertor 2+6 Conv.	$ 75
6100 SSB Xmitter	395
670 SSB Adaptor	39
Co-Dax Keyer	95

Central Electronics

100V Transmitter	325
MM-2 Scope	69
20-A SSB Adaptor	79

Clegg

22'er FM	$129
66'er 6M Xcvr	115
99'er 6M Xcvr	59
Interceptor BRCUR	275
Ant Pre Amp	22
All Bander	69
HT-146	125
2 Vess	259
FM-27-B Xcvr	325

Collins

75 A4 Receiver	$395
75S3B Receiver	695
75S1 Receiver	349
KWM-2 Xcvr	595
32S1 Xmitter	349
PM-2 AC Supply	95
516 F2 AC Supply	139
312B5 Console	425
361D2 Mount	29

Drake

2A Receiver	$149
2B Receiver	189
2AQ SPKR QMULT	29
R4 Receiver	289
R4-B Receiver	349
R4-C Receiver	399
MS-4 Speaker	19
2NT Transmitter	125
2NT Transitter	99
TR-6	695
TR-22 2 Meter	140
T-4X Transmitter	339
TR-72 2 Meter FM	225
AC-4 AC Supply	95
TR-4-C Transceiver	449
CC-1 Console	
CPS-1 Supply	
SC-2 Conv	
SC-6 Conv	
SC-1 Calibrator	
The above all assembled complete pkg.	Only $200

Dycomm

10-0 2 M Ampl	$125
35-0 401N 110 Out	130
470-25 450 MC	120
P-1416 16 Amp Supply	95

Eico

720 Transmitter	$ 49
722 VFO	39
730 Modulator	39

Elmac

AF-67 Transmitter	$ 45
PMR-8 Receiver	79

Genave

GTX22M FM	$165
GTX-200 2M FM	149

Globe/Galaxy

VHF 6+2 Transm	$ 39
Chief Transmitter	39
Galaxy III Xcvr	159
Galaxy V Xcvr	189
Galaxy V Mk II	239
GT-550 Xcvr	279
GT-500A Xcvr	329
AC-400 Supply	79
FM-210 2M FM	95

Gonset

Com II 2M	$ 75
Com II 6M	69
Com IV 2M	129
GC-105 2M	115
G-28 Xcvr	149
G-50 Xcvr	149

Hallicrafters

S-108 Receiver	$ 99
SX-101 Receiver	159
HT-32 Transmitter	179
HT-32B Transmitter	269
SX-99 Receiver	79
SX-115 Receiver	349
HT-37 Transmitter	159
HT-40 Transmitter	49
SX-99 Receiver	99
SX-117 Receiver	189
SR-150 Xcvr	259
SR-160 Xcvr	159
SX-146 Receiver	175
HT-44 Transmitter	159
SX-111 Receiver	149
SX-122 Receiver	249
S-36 UHF Receiver	125

Hammarlund

HQ-110 A VHF Receiver	$189
HQ-110C Receiver	119
HQ-110AC Receiver	149
HQ-145X Receiver	169
HQ-170C Receiver	159
HQ-180 Receiver	379
HQ-215 Receiver	259
SP-600 Receiver	179
HX-50 Transmitter	169

Heathkit

SB-300 Receiver	$199
SB-301 Receiver	229
HR-10-B Receiver	69
SB-303 Receiver	269
SB-220 Linear Amp	449
SB-102 Trivcvr	379
DX-60B Transmitter	69
HW-32 Transmitter	85
HW-100 Transceiver	249
SB-100 Transceiver	299
SB-401 Transmitter	249
SB-101 Transceiver	349
SB-650 Digital Freq. Display	149
HW-30 Twoer	29
Also Sixer	29
H-10 Monitor	69
VHF-1 Seneca	79
HW-12 Transmitter	75
HP-23 AC Supply	49
HP-23B AC Supply	59
HW-202 2M FM Xcvr	159
SB-620 Spectrum Analyz	120
SB-102 Xcvr	369
SB-610 Scope	95
HA-20 6m Linear	125
SB-634 Console	175
SB-604 Spkr	29.50
SB-644 VFO	129.50
SB-230 Linear	359
SB-104 Transceiver	625

ICOM

IC-21 2M FM Xcvr	$299
IC-230 Demo	369
IC-22A 2M FM Xcvr	185
IC-30A 432 MCFM	269

Johnson

1-KW Matchbox/SWR	$195
Courier Linear	139
Ranger I Transmitter	85
Ranger II Transmitter	139
Valiant I Transmitter	129
Invader 2000 Xmitt	495

Kenwood

T-599 Transmitter	$289
R-599 Receiver	289
TS-520 Tranc	429
QR-666	259
QR-666 Receiver	239
TV 502 Transvertor	179

Knight

T-60 Transmitter	$ 39
r-100 Receiver	59
TR-108 Trancur 2M	79

Lafayette

HA-800 Receiver	$ 89
HP-350 Receiver	149
HE-45 Transceiver	49

Midland

509 H.T.	$149

Millen

92200 Transmatch	$149
90651-A Grid Dipper	95

National

NC-270 Receiver	$119
NC-300 Receiver	129
NCX-5 Transceiver	279
NCX-5MKII Transcvr	299
NC-303 Receiver	199
AC-500 AC Supply	69
NCX-500 Transceiver	199
NCX-3 Transceiver	169
NC-190 Receiver	149
NC-105 Receiver	69

Regency

HR-2B 2M FM	$169
HR-220 FM 220 MC	185
AR-2 2M Amplifier	85
HR-25 2M FM	225
HR-6 Meter FM	189

SBE

SB-34 Transceiver	$249
SB-33 Transceiver	189
SB-144 2M FM	175
SBZ-LP Linear	179

Standard

SRC-146 HT	$149
826 M Trnscvr	195
SRC-144	395
SRC-851T	250

Swan

700-CX Xcvr	$459
260 Cygnet	289
279 Cygnet	329
500 Xcvr	299
500 CX Xcvr	389
117-XC AC Supply	95
14X DC Module	39
MK II Linear	475
KK VI 6 Meter	550
250 C 6M Xcvr	349
FM 2X2M Xcvr	169
FM-1210A 2M	249
350 Transceiver	269
350C Xcvr	299
600R Receiver	339
600T Transmitter	399
410 VFO	79

Tempo

Tempo one Xcvr	$299
AC One Supply	79
FMH 2M H.T.	149
CL-220 Tincur 220 MC	179
FMH 2M w/Talkie	149

Ten Tec

PM-3 Trnsur	$ 49
Argonaut Xcvr	199
KR-40 Keyer	79
RX-10 Receiver	49
S-30 Signalizer	29
Triton II	479

Yaesu

FT-401 Xcvr	$499
FRDX 400SD Rec	325
FT 2 Auto 2M FM	249
FT-101B Xcvr	549
FL-2100B Linear	295
FV-101 VFO	79
101E Xcvr Demo	695

Test Equipment Bargains

Boonton "Q" Meter	$295
Tektronix 5140	249
Tektronix 545A	950
5 3/54A Plug-in wide band preamp	75
Hickok 695 Generator	69
Bendix BC221 Freq Meter	39
Polarad Spectrum Analyzers A84T	1695
Hewlett Packard 400C	75
Precision E-400 Signal Generator	125
Electro Impulse Spectrum Analyzer	395
Dyna/Sciences Model 330 Digital Multimeter	195
Hewlett Packard 4905A Ultra Sonic Detector	550
Hewlett Packard 120A Scope	250
TS-323/UR Frequency Meter	175
Hewlett Packard 4910B Open Fault Locator	650
Bird Mod 43	80
General Radio 650A	150
Measurements Mod 80	195
Nems Clark 1400	495
Ballantine 300H	175
PACO Scope Mod-S-50	75
Singer FM-10C	3495
Simpson 260 V.O.M.	49.50

ICOM IC22S

Regular $299, save $50; buy an ICOM IC22S for $299 (no trades) and take a $50 credit for another purchase.

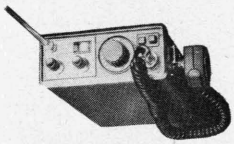

KENWOOD TR-2200A

Regular $229, save $30; buy a Kenwood TR2200A for $229 (no trades) and take a $30 credit for another purchase.

MIDLAND 13-510

Regular $399, save $50; buy a Midland 13-510 for $399 (no trades) and take a $50 credit for another purchase.

KENWOOD

TS820 $ 919.00
TS80S $1098.00

YAESU

FT101E – 799.00
FT101EE – 759.00
FT101EX – 699.00

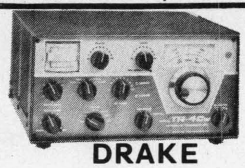

DRAKE

TR4CW – $799.00

MAIL & PHONE ORDERS WELCOMED. BANK AMERICARD ACCEPTED. ALL UNITS GUARANTEED

HAMTRONICS
DIVISION OF
Trevose Electronics

4033 BROWNSVILLE ROAD
TREVOSE, PA. 19047
Telephone:
(215) 357-1400
(215) 757-5300

receiver, i.e., a spectrum analyzer, and a voltage-controlled jammer oscillator. The receiver is needed to lock onto the exact radar frequency, because the radar transmitter is not of crystal stability. Then the jammer must be offset from the radar's frequency by an amount equal to the desired false Doppler shift. Again, this method is expensive and requires operation outside the amateur band.

2. Noise Jamming

Noise jamming is a technique pioneered for use against radars in the 1940s and is still effective today, but it's not for amateurs who wish to retain their licenses. Noise jamming consists of modulating a transmitter with broadband noise. The bandwidth of the noise spectrum is made large enough to cover the operating band of the hostile radar. Covering the police radar band would require a noise bandwidth of 10 MHz. The radar's receiver has a bandwidth of only 10 kHz. The result is that, by having to spread the jamming energy over ten megahertz of which only ten kilohertz is effective, only one-thousandth of the jammer power is being used. Also, this method requires operation outside the amateur band.

Baseband Jamming

This method is the least pensive and most reliable thod that I have tried. The thod is simple and does require operation outside amateur band. It involves mitting a tone-modu- carrier within the ama- band. Since police radars an untuned front end, detector-mixer will act as detector for frequencies utside the police radar band. f the jammer transmitter, operating inside the 3 cm amateur band, is amplitude-modulated by, say, 3140 Hz, the detector-mixer will detect the 3140 Hz tone and display a speed of 100 mph. Hence, the radar can be deceived into reading any desired speed by merely modulating an oscillator by a tone corresponding to the equivalent Doppler shift for that speed. I have been able to deceive radar units as far away as one mile using this scheme with a 15-milliwatt Gunn oscillator and a 15 dB gain horn antenna. The schematic of the unit is included in Figs. 2 and 3. Fig. 2 shows the phase locked synthesizer used to generate equivalent speeds of 1 to 99 mph with thumbwheel switches. The design is a hybrid of CMOS and TTL logic because the parts were on hand. The design is not optimum, but it does work. Fig. 3 shows the modulator which switches the Gunn diode oscillator on and off. The photographs show the car used for the tests.

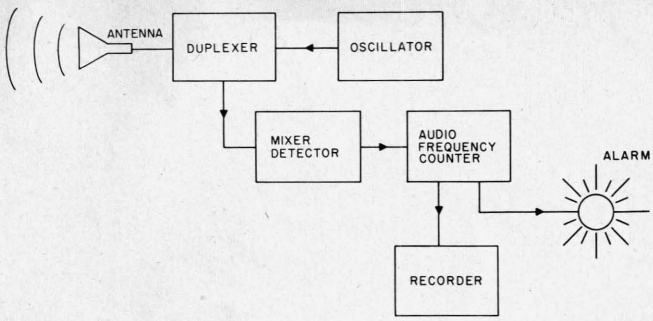

Fig. 1. Simplified block diagram of police radar.

4. Passive Jamming

This area is most interesting in that no transmitter is used. In baseband jamming, the deception is accomplished by transmitting a tone-modulated carrier whose modulation frequency corresponds with the desired Doppler frequency. In passive jamming, it is the reflected radar signal which is modulated to produce the deception. This is accomplished by varying the apparent size or radar cross section of your car. Using an inflatable car and varying the air pressure would work, but a simpler technique is to use an antenna with a varying impedance load. A test unit was constructed with a small horn

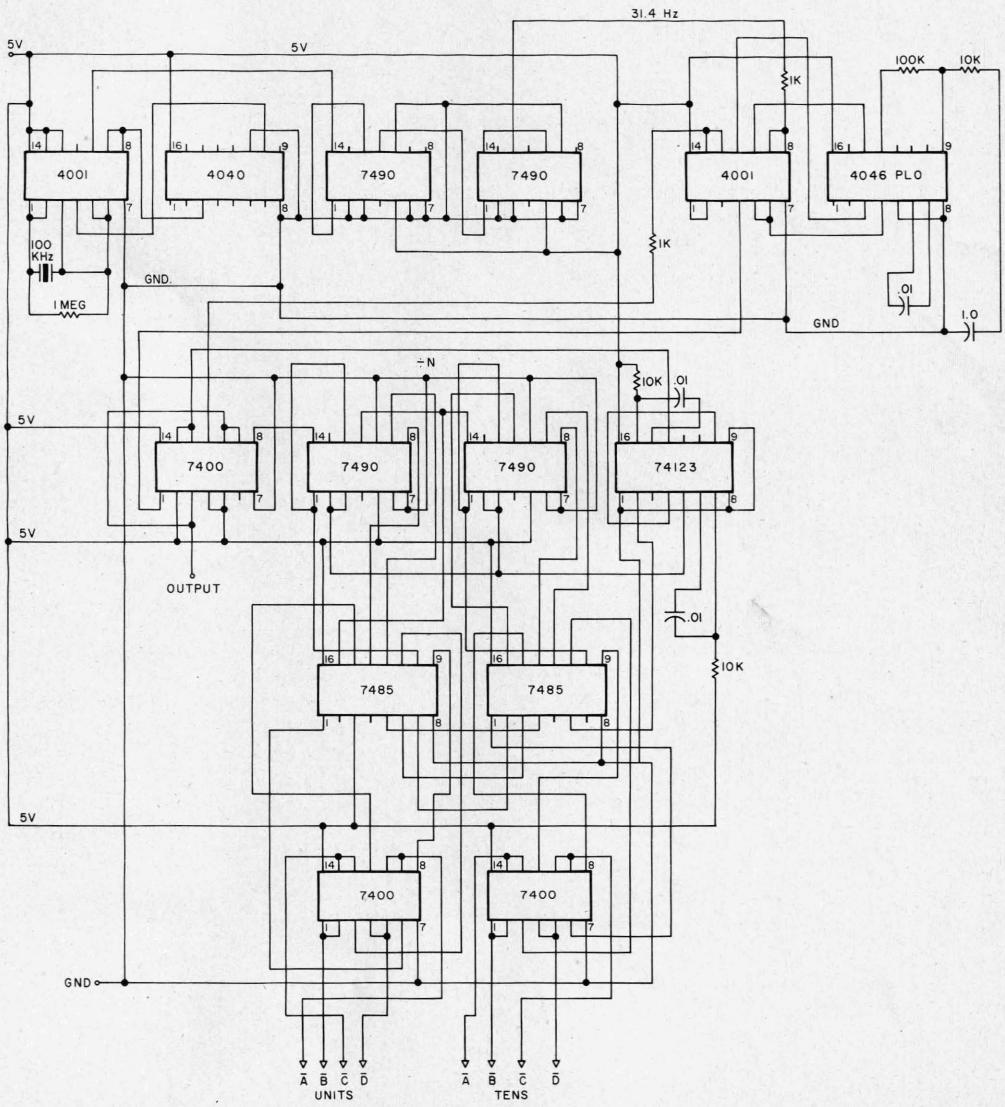

Fig. 2. Phase locked synthesizer.

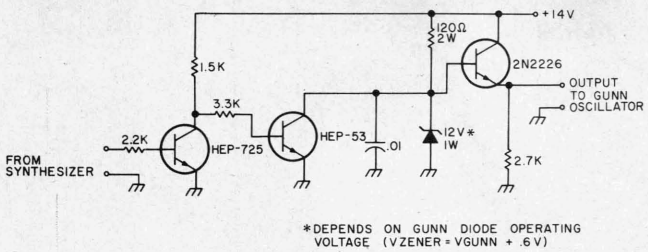

Fig. 3. Gunn diode modulator.

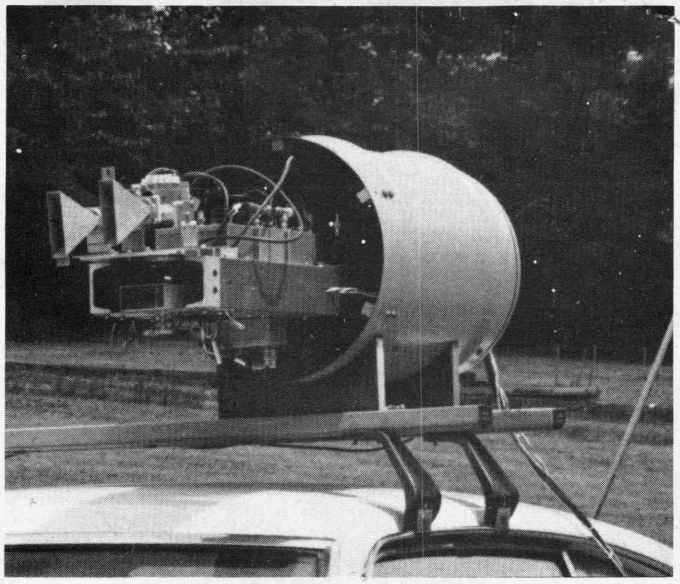

antenna, pin diode switch, and dummy load. The switch is used to alternately terminate the antenna with the matched dummy load or a dead short. The net effect is an amplitude-modulated reflected wave that is capable of deceiving the police radar at ranges of only 20 yards. However, the addition of larger and more advanced antenna designs is expected to increase this range significantly.

Conclusion

Baseband jamming is the most effective and economic method for deceiving police radars. The circuitry is within amateur capabilities. A listing of suggested literature is included and is recommended for potential designers. This article has been limited in scope and theory with the intent that interested amateurs will be able to build workable equipment using these simple guidelines. This article does not cover the full legal problems, and, for that reason, it would be interesting to hear from lawyer amateurs. ■

References

1. *Principles of Electronic Warfare*, Robert J. Schlesinger, Prentice-Hall, Inc., Englewood Cliffs NJ, 1961.
2. *Radar Countermeasures, Radar Technique*, A.N. Volzhin and V. A. Yanovich, (translation of *Anti-Radar*, Military Publishing House of the Ministry of Defense of the U.S.S.R., Moscow, 1960). Available from Clearinghouse for Federal Scientific & Technical Information, Springfield VA 22151, AD682311.
3. "ECM Primer," *MicroWaves*, November, 1969, pp. 44-79.
4. "A Method of Modulation of Standard Radar Target Signals," G. P. Beryulev and V. V. Kostarev, *Radio Engineering and Electronic Physics*, Vol. 18, November, 1973, pp. 1759-1762.
5. "Mobile Smokey Detector," S. M. Olberg W1SNN, *73*, December, 1976, pp. 32-35.
6. "The World of X-Band," Bill Hoisington K1CLL, *73*, March, 1974, pp. 33-44.
7. "Mobile 2.455 KMC Radar Receiver," Paul Barton W6JAT, *73*, March, 1962, pp. 18-20.

"THE PROFESSIONALS"

NEW MODEL CTR-2A • 500 MHz & 1 GHz COUNTERS

NEW Period Measurement

1 us to 1 sec.

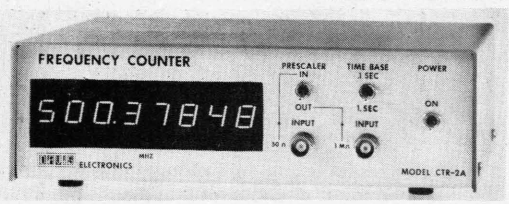

NEW Built-in Pre-Amp

10 mv @ 150 MHz

The New Model CTR-2A Series Counters are designed and built to the highest standards to fulfill the needs of commercial communications, engineering labs and serious experimentors. With an accuracy of + .00005% (oven option) the CTR-2A can handle the most critical measurements and is about half the cost of other commercial counters.

If you need a reliable counter at an affordable price, the CTR -2A is the answer.

- Built-in Pre-Amp 10 mv @ 150 MHz
- 8 Digit .3" LED Display
- High Stability TCXO Time Base
- Built-in VHF-UHF Prescaler
- Automatic Dp Placement
- TCXO Std. ± 2 ppm
- Period Measurement (Optional)
- Input Diode Protected
- 12V-DC Operation (Optional)
- Oven Controlled Crystal (Optional) ± .5 ppm
- Selectable Gate Times - .1 & 1 sec.

500 MHz Kit CTR-2A-500K	$249.95
500 MHz Assembled CTR-2A-500A	349.95
1GHz Kit CTR-2A-1000K	399.95
1GHz Assembled CTR-2A-1000A	549.95

OPTIONS ....

02) Oven Crystal	$49.95	05) 10 sec. Time Base	$ 5.00
03) .43" LED	10.00	06) Period	15.00
04) 12 V-DC	10.00	07) Handle	10.00

PROBES Hi-Z $15.00 • Low Pass $15.00

D10

DAVIS See you at the Dayton Show master charge VISA

DAVIS ELECTRONICS 636 Sheridan Dr., Tonawanda, N.Y. 14150 716/874-5848

SURPLUS TRANSFORMERS

ALL 115 VAC 60 Hz PRIMARIES

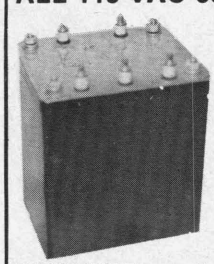

#SS-HW-201P; 2000 VCT 500 MA (700 MA intermittent); 7x5½ x5", 32 lbs. Used $27.50

#SS-S-P243; 900 VCT 250 MA; 4½x4½ 3¾", 15 lbs. Used, $9.9

#84103AD1; 500 VCT 250 MA; one side tapped 50, 75, 120, 175 12.6 V 3 A; 4½x3½x4½", 15 lbs. Unused, $9.

#25D84455DC1; 40 V 15 A; 5¼x5¼x4 18 lbs. Unused $9

#PV-175-9; 15 V 3 A; 13 V 2 A; 6.3 V 7 regulator capacitor; 4½x3¾x3¾", 13 lbs. Unused ..... $

#P601719; 12 V 9 A; 44 V 2.5 A; 12.9 V 3 12.9 V 2 A; 5¼x4¼x4¾", 22 lbs. Unused, $12.

WE ALSO STOCK COMPUTER GRADE CAPACITORS, STUD RECTIFIERS, and HEATSINKS.

WRITE FOR NEW '78 CATALOG.

All prices F.O.B. Lima, Ohio.
Please allow for shipping charges. F1

Use your B/A, VISA, or M/C Card.

Address Dept. 73 • Phone: 419/227-6573

FAIR RADIO SALES
1016 E. EUREKA • Box 1105 • LIMA, OHIO • 45802

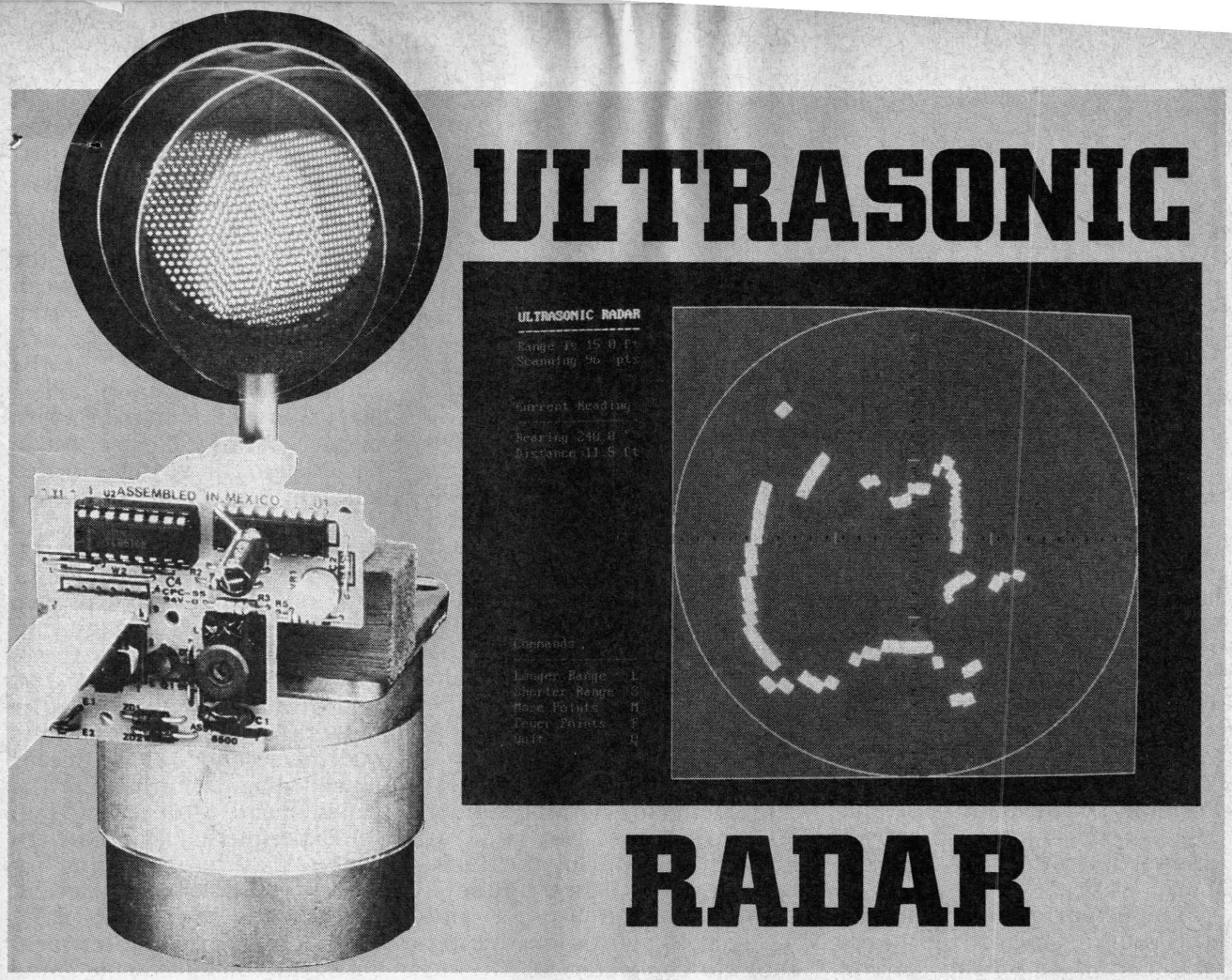

ULTRASONIC RADAR

Give your PC the ranging ability of RADAR with this month's addition to last month's Experimenter project.

RONALD M. JACKSON

IT'S DIFFICULT TO IMPRESS PEOPLE with a home computer. Even if the computer has a 486 processor running faster than blazes, from the outside it just looks like a tan box. There's not much you can bring up on the screen that will impress them either—they've seen it all before on TV. However, this month's project puts a live-action radar-like display in high-resolution color graphics on your home computer screen—and it's guaranteed to impress. People will be amazed as a blip moves about on the computer's "radar" display, following their movements about the room.

The system works as follows: An ultrasonic rangefinder measures the distances to surrounding objects. (Note that because ultrasonic energy rather than radio frequency is used, this project is more like sonar than radar.) A stepper motor rotates the transducer, giving full 360° coverage. The ultrasonic rangefinder and stepper motor are controlled and interfaced to your home computer by the Experimenter interface presented last month. The software, written in Microsoft's QuickBASIC for PC-compatible computers, is available on the *Electronics Now BBS* (516-293-2283), or on disk from the source mentioned in the Parts List. A Macintosh version is also available.

The rangefinder

Our project uses the same ultrasonic transducer that is used in Polaroid cameras. Note that we will not be building the transducer unit because it is *not* available as a kit—only as a preassembled surplus unit from the source mentioned in the Parts List. An ultrasonic rangefinder emits a brief pulse of high-frequency sound. Any object hit by the sound produces an echo. The distance to the object is determined by measuring the time delay between the transmission of the original pulse and the return of the echo, which is displayed.

The Polaroid rangefinder is made up of two parts: a transducer and a ranging board. The transducer, shown in Fig. 1, acts as both a speaker and a microphone. It emits the ultrasonic pulse and "listens" for the

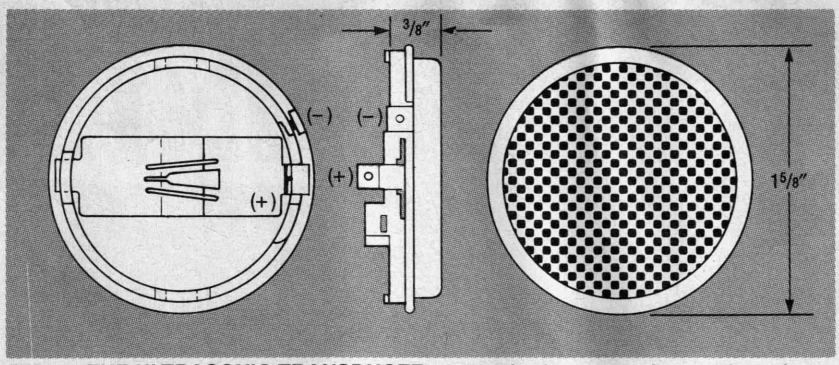

FIG. 1—THE ULTRASONIC TRANSDUCER acts as both a transmitter and receiver.

echo. The ranging board (Fig. 2) provides the high voltages required to run the transducer, sensitive amplifiers for echo detection, and control logic. The only adjustment on the ranging board, VR1, changes the sensitivity of the echo detector. The transducer is mounted on top of the output shaft of a stepper motor, which gives the transducer a 360° field of view. The ranging board mounts beside the stepper motor. Figure 3 shows the entire radar assembly.

The Experimenter controls the ranging board, measures the round-trip time of the pulses, controls the stepper motor, and communicates with your computer. Figure 4 shows the connections between the transducer, ranging board, and the Experimenter. The ranging board uses a nine-conductor flexible cable. The connector for this cable can be installed in the X1 connector mounting area on the Experimenter. The cable has a black stripe on it to indicate pin 1.

The ranging board's power requirements are normally under 100 milliamps, but peak at about 2 amps during the transmit period. Power passes through the GND (pin 1) and V+ (pin 9) signals on the flex cable to connector J1. Due to the inductance of the cable, the ranging board might experience a supply voltage drop of about 4 volts (on a 5-volt supply!) during the transmit period. That can cause the ranging board to malfunction. To prevent that, install a capacitor of 300μF or greater on the ranging board at J1 between V+ and ground. To ensure that the circuitry on the Experimenter is not affected by the sudden power demand, add a 300 μF capacitor on the Experimenter end of the cable. It can be added in the wiring grid area adjacent to X1.

Figure 5 shows a timing diagram of the ranging-board signals. When the Experimenter sets INIT high, the ranging board sends sixteen high-voltage drive pulses to the transducer. It takes about 360 microseconds to transmit the pulses. The Experimenter waits one millisecond to allow time for pulse transmission and for the transducer to settle down. Then the Experimenter sets BINH high to start the driver "listening" for an echo. If an echo is detected, the ranging board sets ECHO high. The Experimenter measures the time from BINH going high to ECHO going high. Then the Experimenter resets INIT

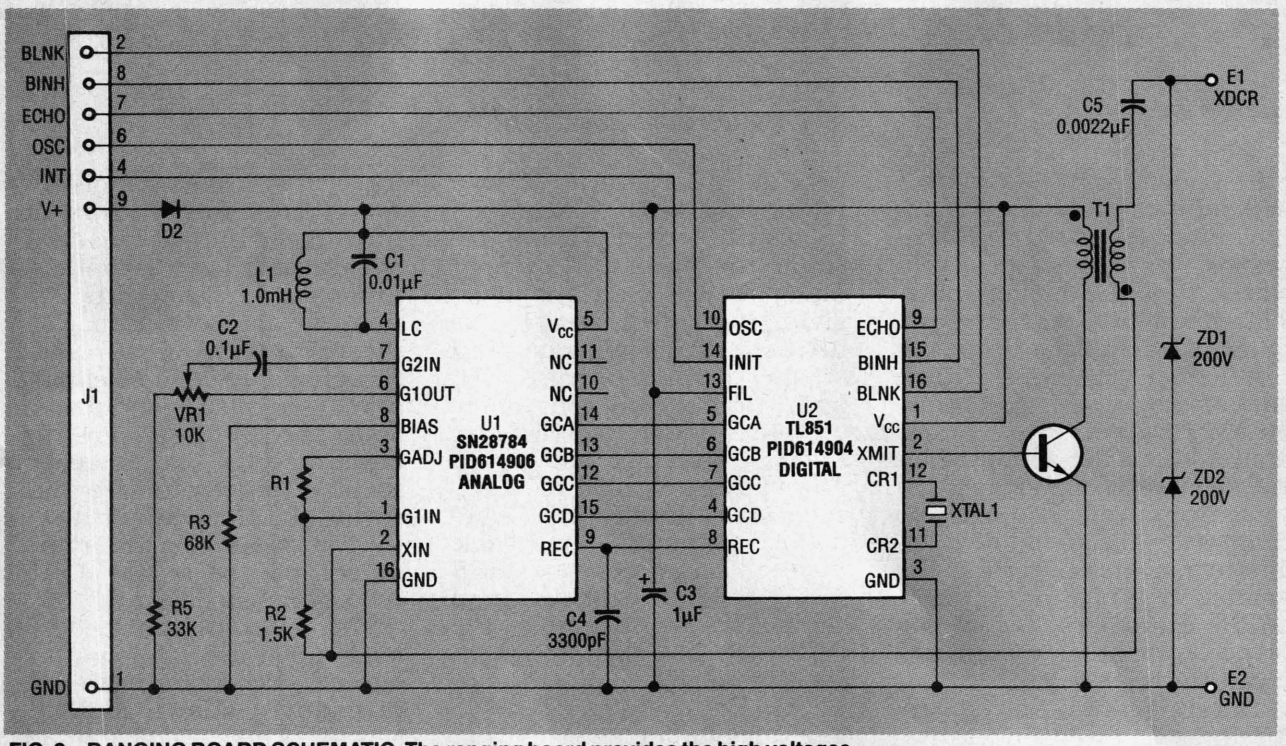

FIG. 2—RANGING BOARD SCHEMATIC. The ranging board provides the high voltages required to run the transducer, sensitive amplifiers for echo detection, and control logic.

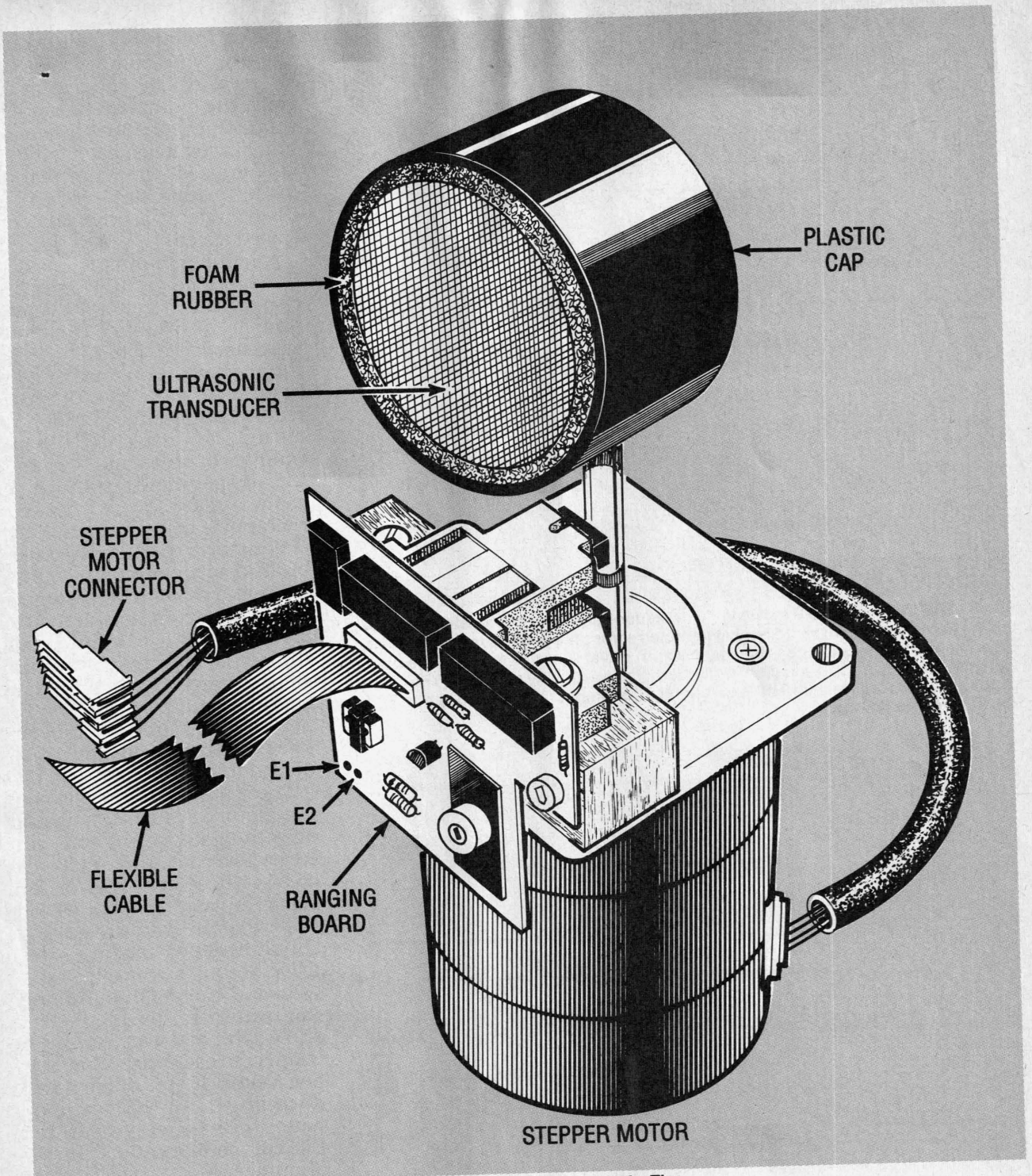

FIG. 3—THE TRANSDUCER IS MOUNTED to the stepper-motor output shaft. The ranging board is also mounted to the stepper motor.

and BINH low. If no echo is detected in about a half second, the Experimenter cancels the measurement.

The measured time is sent to the computer, which then calculates the distance based on the speed of sound. (The speed of sound in air is about 1100 feet per second, but it varies with temperature, humidity, and barometric pressure.) You can measure the speed of sound for your existing local weather conditions with the program DISTANCE.BAS, which is contained in the self-unarchiving ZIP file on the *Electronic Now BBS* (516-293-2283) called EXPER1.EXE. Since the Experimenter measures time with 10-microsecond resolution, this program can calculate distances to within about a hundredth of an inch!

The stepper motor

The project uses a stepper motor that rotates the ultrasonic transducer so it scans around the room. A stepper motor differs from an ordinary

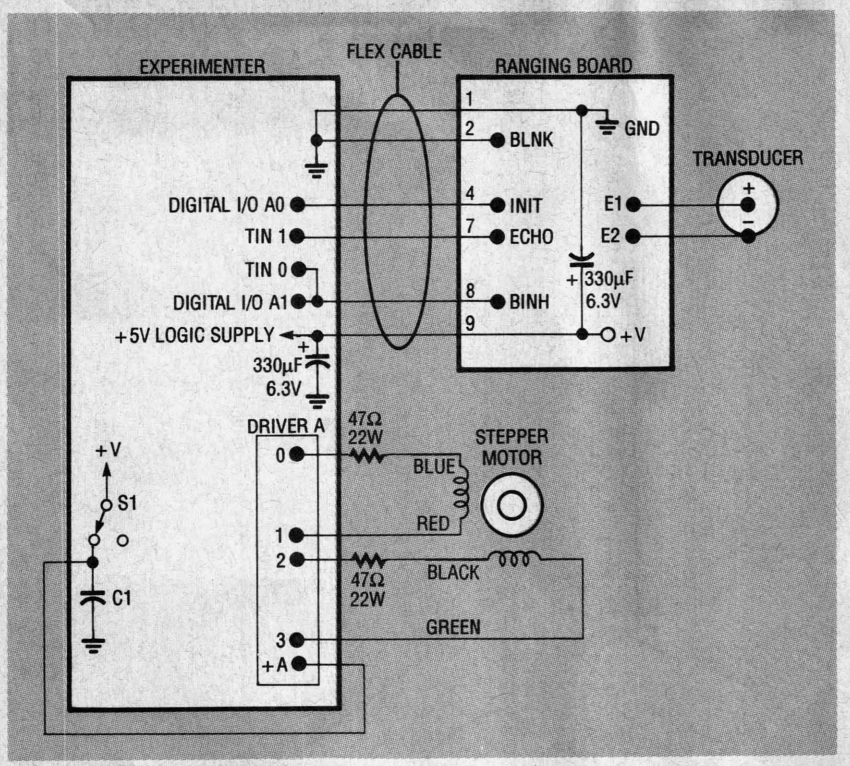

FIG. 4—THE CONNECTIONS between the transducer, ranging board, stepper motor, and the Experimenter. Capacitors must be added across the power supply on both the Experimenter and ranging boards. The power to driver A can be wired to the power switch S1 (as shown), or connected to an external power supply or battery. The choice of power source will depend on your selection of stepper motor, and the way the Experimenter is powered.

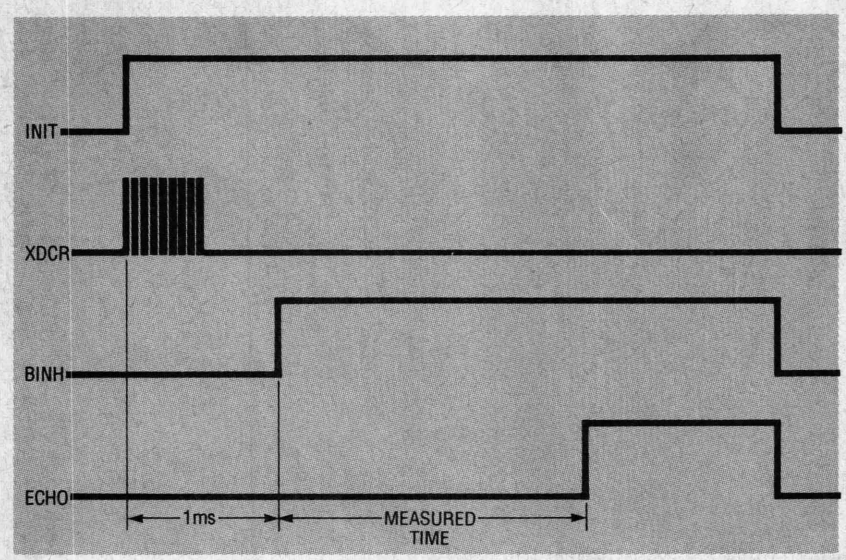

FIG. 5—TIMING DIAGRAM of the ranging-board signals for this project. The Experimenter sets INIT high, then the ranging board sends pulses to the transducer. The Experimenter waits for the pulse transmission and for the transducer to settle down. Then the Experimenter sets BINH high to start the driver listening for an echo. If an echo is detected, the ranging board sets ECHO high. The Experimenter measures the time from BINH going high to ECHO going high.

DC motor that has two wires connected to brushes inside the motor. As the armature rotates, the brushes connect successive commutator bars to windings to provide torque. The motor speed depends on how heavily it is loaded and how much voltage is supplied.

By contrast, a stepper motor has separate wires to each winding. Energizing a winding causes the armature to rotate slightly, typically a few degrees. By sequentially energizing the coils, the motor can be made to rotate through 360°. By controlling exactly when each winding is energized, the motor can be made to turn through a specified angle at a precisely controlled speed.

A stepper motor is used in this project because it gives precise control of motor-shaft location. If an ordinary DC motor were used, we couldn't control the shaft position and wouldn't be able to take the distance readings at evenly spaced positions. By controlling the number of steps and step rate, the stepper motor will turn the exact angle required between each pulse transmission.

Thanks to the Experimenter's built-in stepper-motor control, the sequencing of the stepper-motor's coils is handled automatically. Your computer tells the Experimenter how many steps it wants the motor to take between readings, and the Experimenter handles all of the timing and sequencing required to step it there.

There are many types of stepper motors available. Low-cost, light-duty stepper motors have either two coils, three coils, two coils with center taps, or four separate coils (see Fig. 6). The Experimenter can drive any of those stepper motors, with drive voltages from 4.5 to 36 volts and currents up to 1 amp. The numbers given in Fig. 6 show which driver output to connect to each wire of the stepper motor. If you don't have a data sheet for your stepper motor you will have to figure out the coil configuration with an ohmmeter.

The Experimenter must be "told" the coil configuration of the stepper motor so that it can provide the proper sequencing of outputs. Table 1 shows the available drives for the four stepper-motor coil configurations. Some configurations can be successfully driven with several different kinds of drives.

In choosing between different drives, you must make tradeoffs between the motor's power

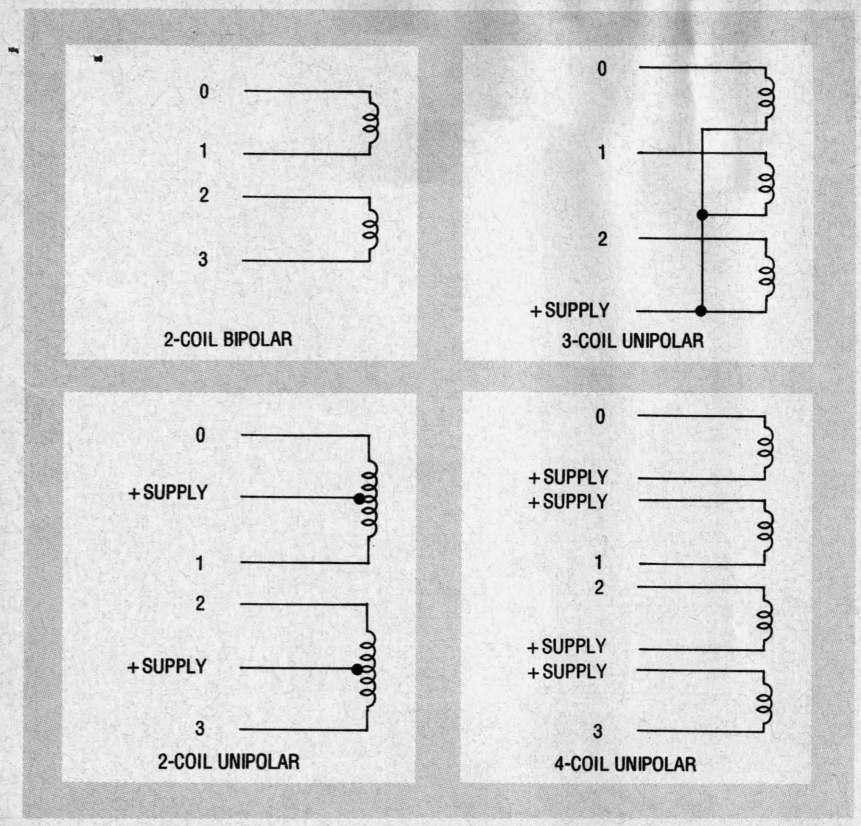

FIG. 6—COMMON STEPPER MOTORS have either two coils, three coils, two coils with center taps, or four separate coils. The Experimenter can drive all these stepper motors.

TABLE 1—STEPPER MOTOR DRIVE TYPES

Type	Coil Configuration	Common	Drive Pattern
2	3 coil unipolar	− supply	1 phase
3	3 coil unipolar	+ supply	1 phase
4	3 coil unipolar	− supply	half-step
5	3 coil unipolar	+ supply	half-step
6	4 coil unipolar	− supply	1 phase
7	4 coil unipolar	+ supply	1 phase
8	4 coil unipolar or	− supply	2 phase
	2 coil bipolar	none	2 phase
9	4 coil unipolar or	+ supply	2 phase
	2 coil bipolar	none	2 phase
10	4 coil unipolar or	− supply	half-step
	2 coil bipolar	none	half-step
11	4 coil unipolar or	+ supply	half-step
	2 coil bipolar	none	half-step

consumption, torque, and resolution. For example, a unipolar stepper motor with its common leads connected to the + supply can be driven in modes 7, 9, or 11. Mode 7 (one-phase drive) minimizes power consumption, because only one coil is active at any time, although this reduces torque. Mode 9 (two-phase drive) runs two coils simultaneously, providing maximum torque, although the power consumption is doubled. Mode 11 (half-step drive) alternates between driving two coils and one coil, doubling the number of steps per revolution.

Stepper motors are usually labeled with the step angle (or steps per revolution), maximum coil voltage, and coil resistance (or maximum current). If you use a stepper motor with coil voltages of twelve volts or less, you can run both the stepper motor and the Experimenter from the same power supply. Some stepper motors draw more current than a small power supply can provide, so a rechargeable battery pack is usually the most economical power alternative.

Let's look at one example of a suitable stepper motor. The motor has four wires terminated in a connector: blue, red, black, and green, in that order. An ohmmeter shows that the coils are arranged in a two-coil bipolar configuration; blue paired with red and black paired with green. The label says that it's a 1.8° per step motor. That corresponds to 200 steps per revolution in the two-phase drive mode (type 8), or 400 steps per revolution in the half-step drive mode (type 10).

The maximum DC voltage listed on the motor is 4.25 volts, with a current of 1.7 amps; it is a heavy-duty ball-bearing motor. We don't need the torque that this motor can produce at its full power rating for this project. We will limit the current to a reasonable level by adding series resistors to the motor leads. If we were building a project that required higher torque, we could add power transistors to the Experimenter's driver outputs, and run the motor at its full rated current.

Let's calculate the value of the series resistors. Suppose we want to run the Experimenter, ranging board, and motor from an unregulated 9-volt, 500-milliamp power supply. The Experimenter and ranging board consume about 100 milliamps each, leaving about 300 milliamps for the motor, or about 150 milliamps for each coil. That is less than a tenth the motor's rated capacity, but in this low-torque application it will be adequate. At that low current level, the voltage drop across each driver is about 0.7 volt, for a total drop of 1.4 volts. If we substitute the correct

numbers into the equation:

$$R_{SERIES} = \frac{E_{SUPPLY} - E_{DROP}}{I_{CHOSEN}} - R_{MOTOR}$$

we get

$$R_{SERIES} = \frac{9 - 1.4}{0.150} - 2.5$$

With those numbers we arrive at a series resistor value of 48 ohms. The closest standard values are 47 and 51 ohms. The series resistors can be installed in the wiring grid area on the Experimenter.

Be sure to use resistors with adequate power-handling capacity. From the equation $P = I^2R$ we can calculate the required power rating ($0.15^2 \times 48$) of 1.08 watts, so 2-watt (or larger) resistors should be used. Remember to connect power to the +A input on driver A. You can obtain power from the power switch to C1. That way no power will be drawn when the Experimenter is switched off.

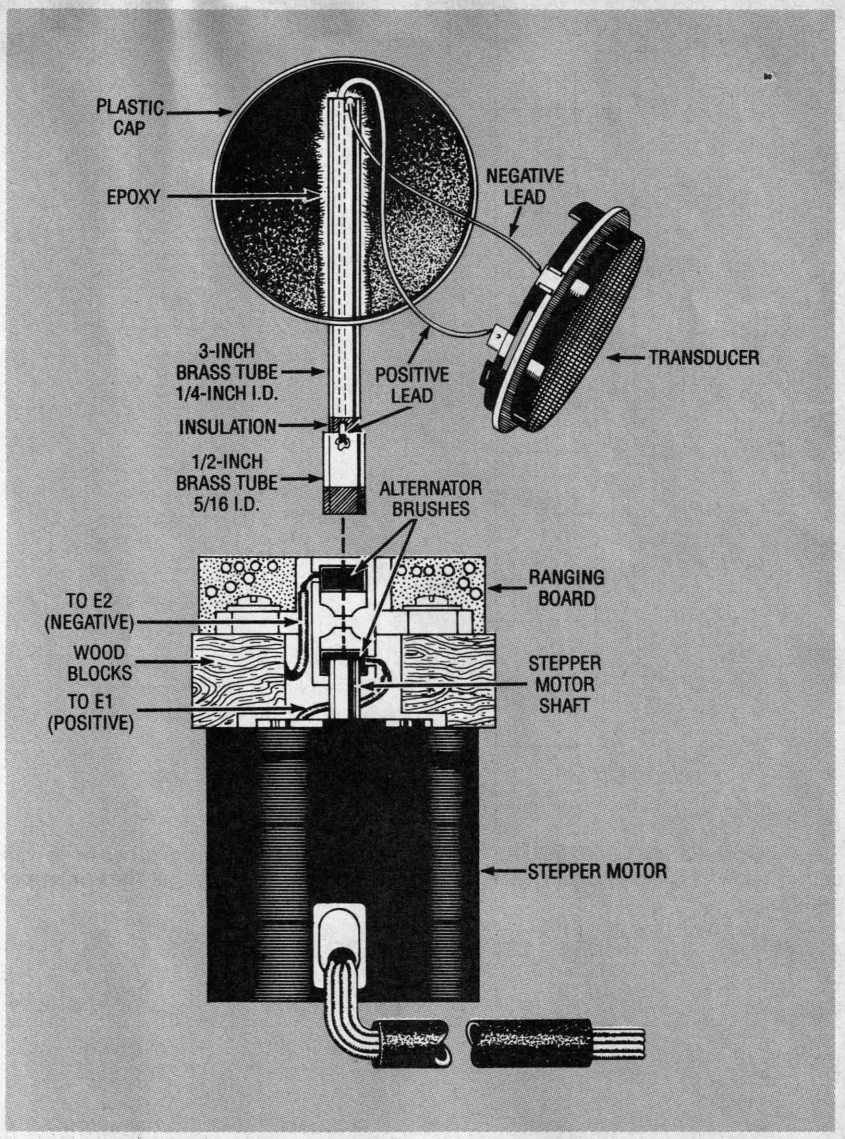

FIG. 7—TWO ELECTRICAL CONTACTS must be maintained while the transducer rotates. Here's how that was done on the prototype.

Assembly

In building the radar unit, two electrical contacts must be maintained while the transducer is rotating. Figure 7 shows how that was done on the prototype. Start with a brass tube with a ¼-inch inside diameter about 3 inches long. That tube will provide the ground connection between the ranging board and the ultrasonic transducer. Insulate one end of the 3-inch tube with electrical tape or heat-shrink tubing, and then slide a short ring (about ½-inch long) of slightly larger inside diameter brass tubing over the insulation. Another piece of tape or heat-shrink tubing can be used to hold the outer ring in place over the insulation—just make sure that most of the ring remains exposed. Drill a small hole in the side of the longer tube just above the shorter ring. Solder an insulated wire to the shorter ring, and run the wire through the hole and up and out the far end of the longer tube. The outer ring and the wire connected to it will provide the positive connection between the ranging board and the transducer.

Drill a hole the same diameter as the long tube in the side of a plastic jar lid, as close as possible to inner top surface of the lid. Slide the lid onto the end of the tube farthest from the outer ring, and glue it in place. (Sanding the mating plastic and brass surfaces will allow the glue to hold better.) Solder one of the two clips provided with the ultrasonic transducer to the wire from the outer ring, and slide the clip onto the inside terminal (+) of the transducer. Solder another insulated wire to a point on the longer brass tube inside the lid. Solder the other end of that wire to the unused transducer clip, and slide the clip onto the outside terminal (−) of the transducer. Pay attention to polarity! Mount the transducer in the lid by surrounding it with a strip of foam rubber for a snug fit. The longer tube can now be bonded to the shaft of the stepper motor with epoxy.

Automotive alternator brushes make excellent contacts for linking the ranging board to the long tube and ring. You can buy the brushes at most automotive stores for a few dollars, or a complete brush assembly with mounting hardware for less than $10. There are many different styles of brushes and assemblies, and some are easier to adapt than others. Choose one that has a convenient size and shape to work with. You might need to file some parts of the assembly, or remove unneeded metal fit-

tings. The assembly can be mounted to the stepper motor with small wood blocks.

Complete the connections by running wires from the brushes to the ranging board. Again, observe the correct polarity! The longer tube is ground, and it connects to the E2 terminal on the ranging board (the black wire with the red stripe). The outer ring is positive, and it connects to the E1 terminal (the plain black wire). Although the ranging board produces 400 volts when operating, it does so only in brief pulses of current low enough so that it is not dangerous—but it will give you a mild shock if you touch the right place.

The ranging board can be glued to the wood blocks or the brush assembly. If the 300 µF capacitor installed across J1 pins 1 and 9 interferes with mounting the ranging board, move the capacitor to the front of the board on U1 between pin 16 (GND) and pin 5 (V+).

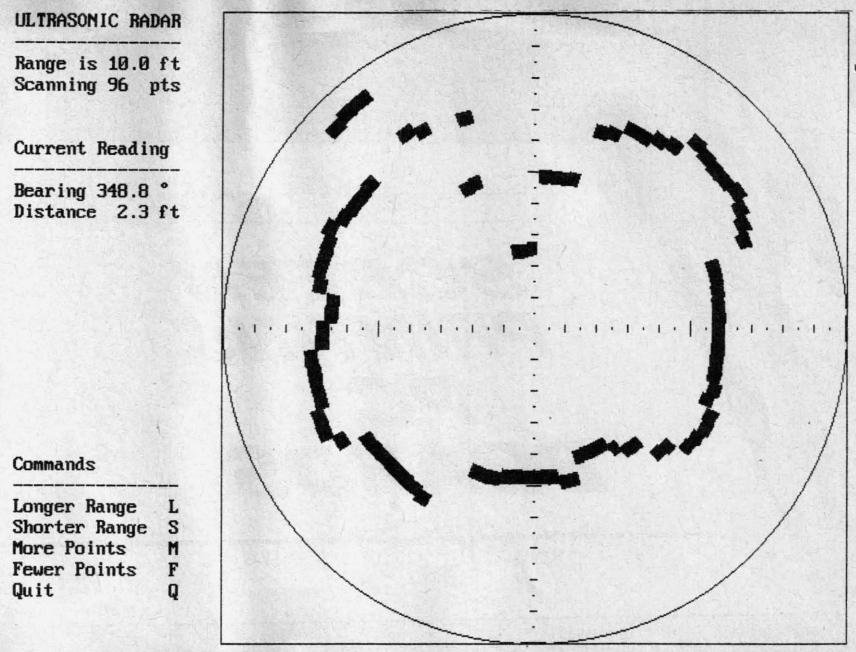

FIG. 8—THE RADAR IN OPERATION. The ultrasonic "RADAR" can detect and display objects from about 6 inches to 35 feet. Here the maximum range has been set to 15 feet.

Software

Two programs were written for the ultrasonic radar, and both are contained in the self-unarchiving ZIP file (EXPER1.EXE) on the *Electronics Now BBS*. Both programs were written in Microsoft's QuickBASIC. DISTANCE.BAS is a simple distance-measurement program. It pulses the rangefinder several times per second and reports the distance measured with 0.01-inch resolution over a range from about 6 inches to 35 feet. You can calibrate the unit for the speed of sound at your location by placing a flat object, such as a box, a carefully measured distance from the transducer. When you run the program, it will report the distance it measured, based on the default value for the speed of sound (1100 feet per second).

If the reported distance is more than the actual distance, decrease the speed of sound parameter by pressing the "1" key. It decreases the parameter by 10 feet per second. Pressing the "2" key decreases the speed by one foot per second. If the reported distance is less than the actual distance, increase the speed of sound parameter. Pressing the "4" key increases the parameter by 10 feet per second; pressing the "3" key increases the parameter by 1 foot per second.

You can include the speed-of-sound parameter you determined in the radar program to make it more accurate. The speed of sound parameter, and other initialization parameters, are read by the radar program from the file RADAR.DAT. The graphical radar program is easy to use. For a high-resolution color radar display, your computer will need EGA or VGA display electronics and a color monitor. If your computer just has CGA, the radar program will provide a lower resolution black and white display, as shown in Fig. 8.

Each rangefinder distance reading is plotted on the display in real-time. It provides scale information with bars of different colors and lengths drawn along the axes. Tens of feet are marked by long green bars; five-foot marks are red; and one-foot marks are short green bars. Half-foot marks are short black bars, and quarter-foot marks are green dots.

On the left side of the display the program reports the present range values and the number of scanning points in each revolution. The bearing and distance values are updated for each rangefinder measurement. Listed at the lower left are the commands you can give the program while it is running. Pressing the "L" key increases the displayed range (up to 35 feet). Pressing the "S" key decreases the displayed range (down to 5 feet). Pressing the "M" key causes the drive motor to scan more points per revolution (up

Continued on page 86

SOURCES

The following parts are available from Fascinating Electronics, PO Box 126, Beaverton, OR 97075. For VISA or Mastercard orders call 1-800-683-KITS, weekdays 10:00 AM to 5:00 PM, Pacific Time.

- Ultrasonic transducer, ranging board, cable, connector, and capacitors—$69.90
- PC-compatible or Macintosh software on either 5.25- or 3.5-inch disk (please specify machine and format)—$9.90
- Experimenter in kit form—$149.90
- Assembled and tested Experimenter—$199.90
- 9-volt 500 mA power supply—$11.90
- There is a limited quantity of the 4.25-volt, 1.7-amp, 200-step-per-revolution, surplus/used stepper motors available (includes series resistors)—$14.90

Please include $3.40 for shipping and handling with your order. Foreign orders, please inquire for prices and availability.

that, set a breakpoint just past the CALL, and then use the debugger to execute the CALL instruction. If you've done a good job, you'll see the company logo on your screen. If something else happens, you'll know you haven't found the right CALL address. That means you'll just have to go back to the address of the IRET instruction and search further on for the correct IRET.

If you were successful, write down both the address of the CALL and the hex equivalent for the instruction. This is your first roadmap in the code. Whenever you see the company logo appear on screen, you know exactly where that happens in the program.

The next step is to find the addresses of the CALL's for each of the steps you listed in the loading sequence of the program. It's a bit of a mindless activity, but as you trace through the code following the CALL to the logo routine, you'll have to test each of the CALL instructions you come across by using your debugger to execute them. Don't forget to write down the CALL address, and set a breakpoint just after it before executing the code. That's because executing unknown code in this manner can crash the computer. You want to be able to get back to where you left off if that happens to you.

It might take some time, but sooner or later you'll execute a CALL and the title screen will appear on your monitor! That's always a thrilling moment, no matter how many times you do this stuff. Even though you're far from your ultimate goal of getting rid of the document check, you're definitely on the right track.

By following the process I've described, you'll sooner or later arrive at the CALL that takes you into the document check. When you finally get there, the boring part of the job is just about over and the intellectual part is about to begin. That's what we'll talk about next time. In the meantime, pick a piece of software to experiment with, and collect the software tools you'll need. Remember that XRAY.ZIP and MEMVIEW.ZIP are posted on the *Electronics Now BBS* (516-293-2283). Ω

ULTRASONIC RADAR

continued from page 37

to the resolution of the drive motor selected). Pressing the "F" key reduces the points in the scan (to a minimum of 12, depending on motor resolution).

You can modify RADAR.DAT text file with any text editor or word processor. Each parameter is followed by a comment about its function. The first parameter allows you to select a monochrome display, which is useful if you want to make a hard copy by pressing the print-screen key. (You also must set up the graphics print driver in DOS.)

The speed-of-sound value you determined is set next. The next few parameters specify the stepper motor used; the drive type, steps per revolution for your motor at that drive type, and the motor speed in milliseconds-per-step. The last parameters adjust for the characteristics of the rangefinder and radar display. You can leave these values at their defaults. Be sure to save any changes that you make to RADAR.DAT as a text or ASCII file.

The QuickBASIC source code for the radar program can be downloaded from the *Electronics Now BBS*. However, it is also available on disk, along with the DISTANCE program, in both source and executable form from the source given in this article. Versions for the Macintosh computer are also available.

The relative difficulties of converting the radar program to run on other types of computers will depend on how closely the version of BASIC on that machine resembles Microsoft's QuickBASIC. You can contact Fascinating Electronics (see supplier list) to determine if anyone has already performed the conversion for your type of computer. If so, the program will probably be available to you at little cost. If not, you might want to consider making your translation available to other hobbyists through Fascinating Electronics. Ω

SPECTRUM ANALYZER

continued from page 56

olution, but the resolution bandwidth was reduced from 30 to 1 kHz. Figure 12 illustrates how this narrow bandwidth presents the true deviation of the audio sidebands. The viewing bandwidth has decreased from 30 kHz to 1 kHz. The sweep has increased from 20 milliseconds to 18 seconds. All other settings remain the same.

In the original presentation shown in Fig. 9, the reference level was adjusted so that the video carrier would fit in the vertical span of the display. Because the audio carrier is lower, it should be shifted upwards. This is done by decreasing the reference level from 9.3 dBmV to −12 dBmV, elevating the audio carrier position, as shown in Fig. 13.

In the previous step, only the reference level was moved, but there was no change in the dB value per vertical division. If you want to expand vertical resolution, the value of graticule divisions can be changed, as shown in Fig. 14. The roughly horizontal noise base or floor is pushed below the lowest division.

This last step calls for a control available only in digital spectrum analyzers that have digital marker labels. These have been set at the extremes of the audio subcarriers. If this feature is not available, the operator must count divisions and multiply that value by the value of frequency per division.

The last control to be discussed is the *span* or *video bandwidth* control. It is a low-pass, post-envelope detector that smooths the displayed waveform by averaging random noise. The normal detection mode for a spectrum analyzer is peak, so the displayed noise level drops from a peak to an average value in the smoothing process. This improves the visibility of signals close to the noise floor. However, as with resolution bandwidth, only the setting necessary to make the measurements you need should be used. Ω

James D. Powell II N8AMR/4
6400 J Terrace View
Blacksburg VA 24060

Adam-12 Revisited

— a scanner unscrambler

This simple circuit will decode the most common scramblers used, and is small enough to fit inside hand-held units.

After buying a new VHF high-low scanner and adding all the necessary options such as crystals, flexible antenna, and rechargeable batteries, I found that it was still lacking one useful option, an unscrambler. Many police departments use a scrambler on some transmissions for one reason or another.

Although there are several schemes for scrambling or encoding audio, by far the most common method is to feed the audio signal along with a carrier into a balanced modulator before transmission. Typically, a 2-3.5 kHz carrier is injected along with the audio, producing a DSB signal centered about the carrier frequency. This signal then modulates the transmitter in the normal manner.

When a scanner that is not equipped with a demodulator like the one at the transmitter receives the scrambled signal, it produces the same sort of garbled (and unintelligible) audio you hear from an AM receiver tuned to a DSB or SSB signal. The fact that I could not receive the scrambled transmissions was enough to prompt me to construct a circuit to recover the audio. I would like to remind anyone who builds one of these decoders, that, as with any other information you might obtain over your scanner, you cannot divulge the content of the transmissions.

The Circuit

I designed the circuit with the following conditions in mind:

1. The circuit must operate on the scanner's 6-volt battery supply.
2. The circuit must fit in the scanner with no external components.
3. The change from normal to decode operation must be simple and quick.

The final demodulator uses a Signetics N5596 balanced modulator/demodulator. The pin designations in Fig. 1 refer to the 14-pin DIP package. The National Semiconductor LM1496 or an HEP6050G is also usable with no circuit modifications, but the pinouts are different. The carrier signal is supplied by IC2, a 555 timer. Potentiometer R1 is used to balance the demodulator (null out the carrier), with no audio input to the IC. R2 adjusts the frequency of

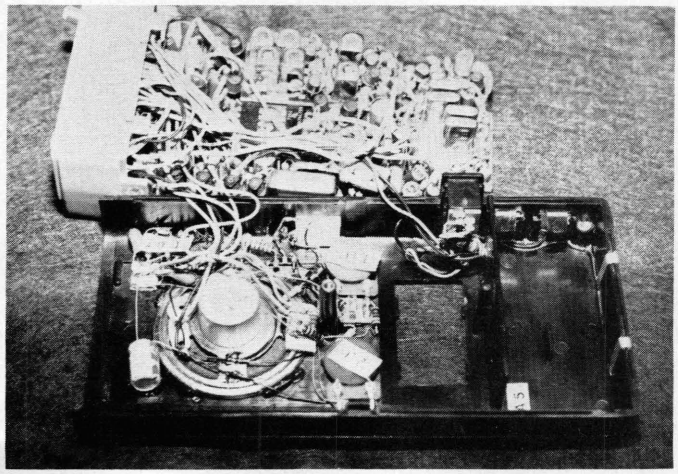

Photo A. View of the inside of the Pro-6 scanner with the decoder installed. Major components are secured to the case with glue.

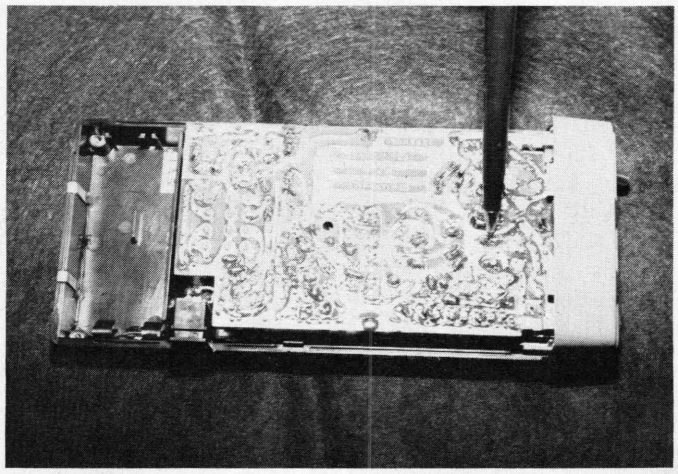

Photo B. View of the foil side of the Pro-6 PC board. The pen points to the point on the board where the volume control wire is disconnected and the decoder input and outputs are inserted.

which causes the ID to be given in CW only. When the repeater is not in use, when it is kerchunked, or when the last ID after a series of transmissions is given, the circuit will enable the voice IDer.

Operation

Referring to Fig. 1, the 555 timer chip and Q1 are set up as a retriggerable monostable. The 7474 is a dual-D flip-flop. In operation, point A is connected to the repeater COR line at a point that is normally high and goes low when a signal is received. If this is not possible (i.e., the only point easily accessible is a point which is normally low and goes high when a signal is received), a transistor or IC inverter can be used between point A and the base of Q1 and pin 2 of the 555 timer to give you the necessary inversion. Every time a signal is received, the 20 uF timing capacitor is discharged by Q1 and the 555 is reset. During this time, the 555's output (pin 3) goes high and will stay there for 20 seconds unless retriggered. Every time the receiver's COR indicates a received signal, the 555 is reset and retriggered for 20 more seconds. This high is applied to the base of Q2 through a limiting resistor making its collector go low. This lights the "CW" LED to let you know that this ID will come up next. The "voice" LED on pin 3 of the 555 will light only when it times out. This occurs only after about 20 seconds of repeater inactivity.

The information on pin 3 of the 555 is also presented to the D input of the 7474 flip-flop. The C (clock) input of the 7474 is connected to your repeater ID timer at a point which is normally low and goes high when it's time to ID. Again, if this is not possible or inconvenient, an inverter will have to be used to provide the necessary inversion between the repeater timer and point B.

The 7474 works as follows: The info presented at the D input goes on to the Q output whenever the clock changes from low to high. The only time the output can change is when the clock *goes* positive. Changes on the D input are not passed on if the clock is *held* high or low. Information on the D input can be changed at any time. It is only its value at the instant of the positive clock edge (time to ID) that matters. This is what is entered into the flip-flop.

So, when it becomes time to ID, point B should go high. At this instant, the flip-flop checks its D input. If it is low (the 555 has timed out because of no repeater activity in the last 20 seconds), the low is passed on to the Q output and the Q output goes high enabling the voice ID. If your voice ID requires a low to enable, an inverter can be used after the Q output or the $\overline{Q}$ output can be used to enable the voice ID and the Q output for the CW ID.

The last feature of this ID selector is the use of S1, an SPDT switch with a center off position. With the switch in the off position, ID selection is completely automatic as described above. However, when put in the position where the clear input (pin 13) is grounded, the Q output goes low and the $\overline{Q}$ output goes high and they both stay that way as long as the switch is in that position for a voice-only ID. Conversely, when in the position where pin 10 (set) is grounded, the flip-flop immediately goes into the state with Q high and $\overline{Q}$ low. This gives you a CW-only ID. This becomes very handy if it is necessary to remove either of the IDers for maintenance.

This ID selector will add a bit of "intelligence" and courtesy to your repeater's automatic operation and provide variety and relief from monotony to the ops who monitor your repeater consistently.

I'll be happy to help with any questions you may have regarding connection to your repeater if you will supply the necessary information and include an SASE.■

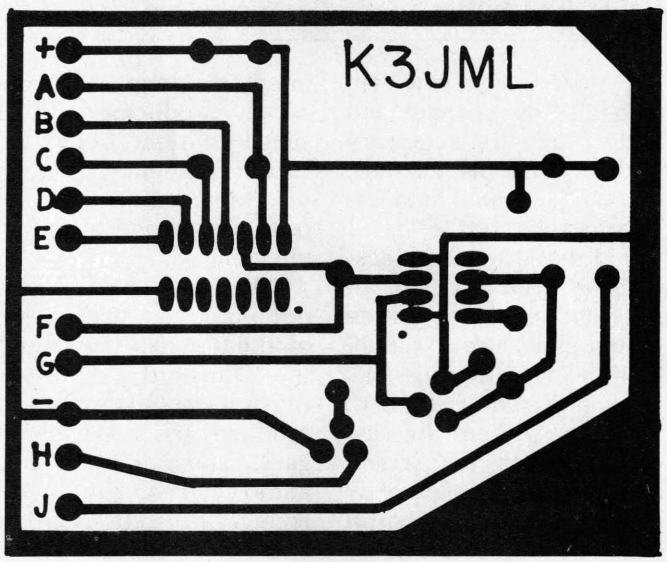

PC board (artwork by K3ETN).

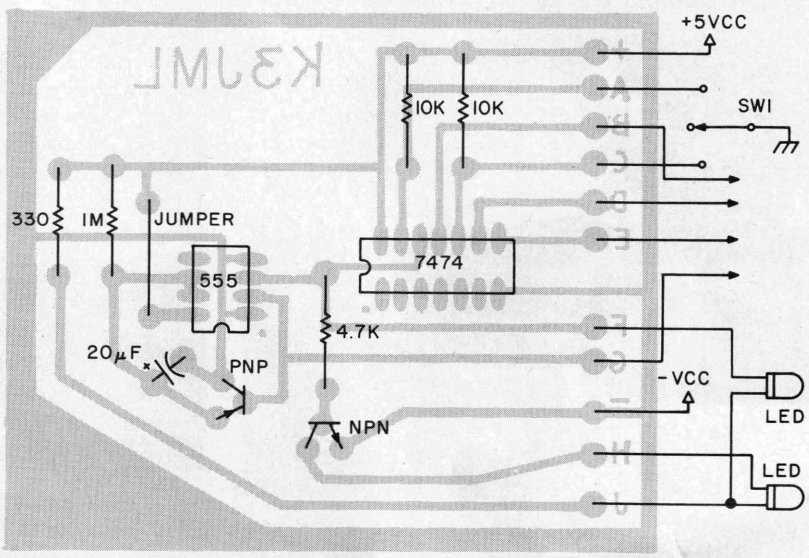

Component layout.

the carrier generator. R2 must be set so that the frequency of the carrier matches the frequency of the carrier that was introduced at the transmitter. C1 must be selected to give the proper range of carrier frequencies in your use. Since most systems use a carrier frequency of from 2.0-3.5 kHz, C1 = .1 uF is a good choice in most cases (see Table 1). Use a good quality 5% capacitor for C1, as it basically determines the stability of the carrier generator.

Some systems use more than one carrier frequency. Usually these will be designated as Code 1, Code 2, Code Black, Code Yellow, etc. If this is the case in your area, you can add more than one R2 pot, as shown in Fig. 1. A slide switch can then select the proper frequency. If only one frequency is used, S2 may be eliminated, with pin 5 of the 555 connected directly to the wiper terminal of R2. S1 turns the demodulator on and off. I used one of the channel lockout switches on my scanner for S1 and thus did not have to mount any extra switches on the radio. Any general-purpose silicon NPN transistor will work for Q1. The audio input to the demodulator should be about 100 mV rms. This is available at the input to the volume control of most scanners.

Construction

My scanner is a Realistic Pro-6 VHF high-low by Radio Shack, so the photographs and details of the text apply to this particular radio. The circuit itself will work with any scanner or monitor, but the component placement may have to be modified due to space considerations.

I originally planned to build the demodulator on a small printed circuit, but, after seeing how little space was available in the scanner, I had to resort to the less elegant point-to-point wiring method. Owners of the Pro-6 can see where to mount the major components by referring to Photo A.

To disassemble the scanner, remove the two screws at the bottom of the radio just below the battery pack. Now remove the back by squeezing the sides of the front half of the case about 3 inches from the bottom of the case. Once you have removed the back, take out the one screw in the middle of the printed circuit board and remove the front half of the case.

All parts of the demodulator mount in the front half of the case. The ICs are mounted by turning them upside down and securing them with a drop of glue. Be sure to identify lead number one on each IC before gluing it down. The ICs will be hard to remove once glued down, so I strongly suggest that you first construct the circuit on a protoboard if you have one.

Trimpots R1 and R2 should be mounted so that they can be adjusted with the scanner operating. I drilled out two of the "fake" holes in my scanner and mounted the pots behind them, so I could adjust them once the scanner

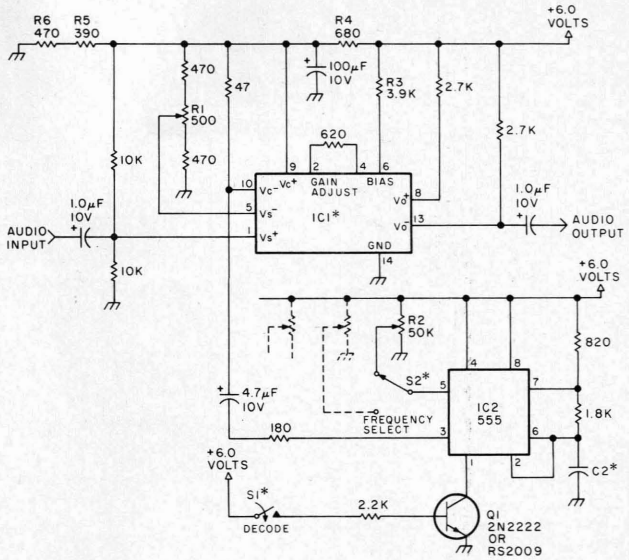

*Fig. 1. Unscrambler schematic. IC1—N5596 14-pin DIP; LM 1496 or HEP6050G also suitable; see text. IC2—555 timer, 8-pin DIP. Q1—2N2222 or RS2009, NPN silicon general purpose. All fixed resistors ¼ W, 10%. * = see text.*

was assembled. After operating the scanner for a few weeks, I found the circuit to be stable enough so that adjusting the pots again was not necessary. Make the needed tie points by gluing small pieces of printed circuit board to the case. Be careful to mount the parts so that they do not interfere with the reassembly of the case.

I used one of the channel lockout switches for S1. If you elect to do the same, refer to Fig. 3.

Testing and Adjustment

Once the circuit is complete, but before connecting the audio input and output to the scanner, you should balance the demodulator. Connect an oscilloscope or high-impedance headphones to the output of the circuit, apply power, and turn the decode switch on. You should have a square wave on the oscilloscope or a tone on the headphones. Adjust R1 to null the carrier output.

If all was well in the previous step, you are ready to connect the demodulator. Unsolder the wire on the PC board going to the volume control. This is a green wire on the Pro-6. See Photo B for the proper location. Solder this wire to the output of the demodulator. Now connect a short wire from the point

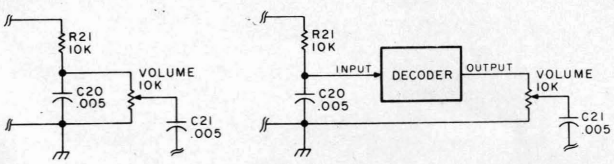

Fig. 2. Details of decoder input and output connections to the Pro-6 scanner. Other brands of scanners will have similar configurations.

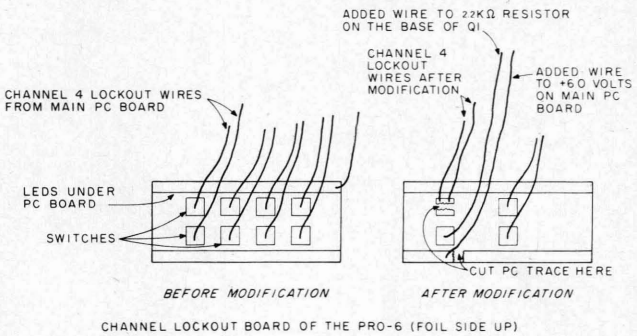

Fig. 3. Modifications to the channel lockout board of the Pro-6 to allow the channel 4 switch to be used as S1 of the decoder. Channel 4 of the scanner will always be active after the modification.

on the PC board where you removed the previous wire to the input of the demodulator.

When S1 is in the off position, the scanner will work normally. When you hear a scrambled message, turn the demodulator on and adjust R2 for a readable output. If you cannot get a low enough frequency for your needs, simply add some capacitance to C1, as in Table 1.

Comments and Conclusions

In operation, the decoder has been totally stable and performed well. When the decoder is switched off, it draws about 3 mA. When it is switched on, it typically draws 15 mA and has little effect on battery life.

If your scanner operates on a higher voltage, scale up R4, R5, and R6 by the % voltage increase (approximately) that you have above 6 volts; also adjust R3 to give 1.0 mA current into pin 6.

I will be glad to answer any questions if an SASE is enclosed. ■

Value of C1 (uF)	Carrier frequencies obtained (Hz) Lowest	Center	Highest
0.10	1650	3500	6000
0.15	1000	2500	4000
0.20	800	2000	3000

Table 1. Selection guide for C1. Lowest, highest, and center frequencies of each range obtainable by adjusting R2 are given.

LETTERS

from page 11

reason, the BS that the ARRL has dished out to Mary has frustrated me.

Mary, as far as I know, started having trouble when she ran against W7PGY in the last director election. I don't know that Thurston was responsible for the mudslinging that Mary got, but he certainly benefited the most from it. If enough people had read between the lines, just maybe the election would have come out differently.

When the election for SCM came up, two people were nominated: W7QGP and W7IEU. The results of the election are obvious; Mary was disqualified. I have proof that Mary was disqualified after the fact. It seems that the people charged with looking after our best interests took it upon themselves to change the rules or by-laws so as to disqualify W7QGP; this caused W7IEU to win by acclamation.

After the fiasco of the SCM election, Mary filed suit in the court system out here. This brings me to the next point of interest.

A few months ago, notice was given in *QST* that elections were to be held for Northwest Division Director and Vice-Director. When after the deadline for nomination petitions had expired and only W7QGP and W7PGY had been nominated, the election was set aside until the litigation concerning the SCM election was settled. Meanwhile, the executive board (minus W7PGY) voted to have W7PGY, his highness and not so exalted ruler of the Northwest Division, Mr. Thurston, act as a caretaker director until such time as the aforementioned litigation is resolved. So far, the litigation has gone on for almost 2 years now, and, by the looks of it, probably a couple more years.

Well, fellow members of the Northwest Division, it seems we are enslaved to the junta in Newington under direct command of Field Marshal Thurston. Heil! Heil! Long live the regime!!

I must close for now and pay homage to his excellency, W7PGY, on my knees bowing down towards Seattle.

Phillip J. Kelly, Sr. WA7DKA
Vancouver WA

P.S. I have remained a member of the ARRL for the sole reason that if any reasonable facsimile of a fair election is run, I want to be able to vote W7PGY out.

HR-13015

You are generally on top of things coming out of Washington which affect amateur radio, so I am somewhat surprised that I've read nothing in *73* (or in any other amateur publication) about a bill currently in Congress which could have an impact every bit as great as WARC. The bill is HR-13015, which was introduced last June by Lionel Van Deerlin (D-Cal.) and Lou Frey (R-Fla.). It is titled "The Communications Act of 1978" and is now moving through the Committee on Interstate and Foreign Commerce, of which Van Deerlin is chairman.

The Van Deerlin-Frey bill has received a great deal of press among broadcasters because of the sweeping changes it would make in regulation of the radio/television broadcast industry. The point is to deregulate the broadcasters, and let free enterprise take its course. The bill also seeks to break up the Ma Bell/AT&T monopoly.

But HR-13015 would also affect amateurs. Amateur radio is not specifically mentioned in the bill, and that in itself is disturbing, since it would affect us so directly. The act, if passed, would repeal the Communications Act of 1934 entirely. It would eliminate the FCC, setting up a 5-member Communications Regulatory Commission in its place. There would also be an independent, policy-making arm of the executive branch known as the National Telecommunications Agency. The duties of the Commission and the Agency, as outlined in the bill, are primarily concerned with broadcasting, although the Commission would also regulate some "non-broadcast services" such as common carriers. Again, the Amateur Service is not mentioned. (Do they know something we don't?)

One interesting change in the bill would be the charging of license fees according to the amount of spectrum allocated. A TV broadcaster would be charged for his 6 MHz, while an AM broadcast station would only have to pay for 10 kHz, etc. In reading the bill, I can't determine if this same system would be applied to the "non-broadcast services," but can you imagine what a ham license would cost if it were? Our 420-450 MHz band alone would cost the same as five TV broadcast permits!

I think this legislation bears looking into by amateurs, and I'll be interested in reading further comments on it.

Mark D. Johns WAØRGV
Iowa Falls IA

DELETE THE DOWNLINK

I would like to express my opinion about the OSCAR-type ham satellites with downlinks into 10 meters now that the band is fully open for worldwide communications direct. It would seem that the time has come to turn off the OSCAR 10 meter downlink.

The reason for my position is that even 100 kHz is a lot to take out of the usable spectrum. Now that the Soviets have put up their two satellites, this has increased to 200 kHz, which seems to be forbidden territory for those wishing to make direct contacts.

The pass time over any given area may be good for only 15 to 20 minutes of acquisition, but now that near-normal direct skip prevails over such a wide area in all directions, it means that interference chances are many times greater because of the wider area a direct skip signal may cover.

There are several other factors that make OSCAR-type satellites unethical at this time, one being the large number of Civil Emergency Preparedness Stations which have been established on these frequencies since shortly after WWII, another being the many QRP stations which have been squeezed out of the lower portions of the band by high-powered activities there.

It is unfortunate that the Soviets chose to make their major output in the 10 meter band at this time of increasing good skip conditions.

I have suggested to AMSAT that if they lead the way now by

Continued on page 93

BUILD THIS

RADAR DETECTOR TESTER

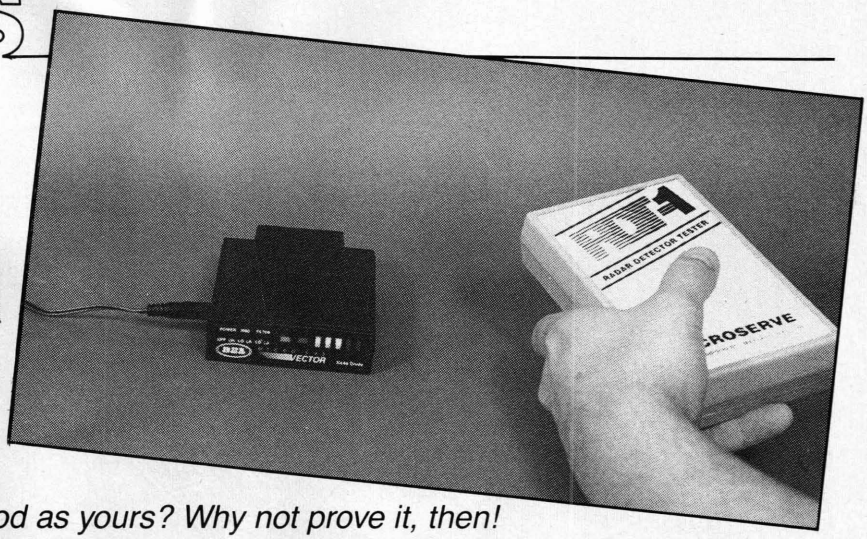

Is your friend's radar detector as good as yours? Why not prove it, then!

JOHN B. AYER

HAVE YOU EVER WONDERED HOW SENsitive your radar detector is? Or have you ever had someone tell you that their detector was better than yours? Until now, the average radar-detector owner had no way to prove or disprove any claims made by the manufacturers concerning the performance of the various detectors on the market.

The radar-detector tester pictured in this article is an easy-to-build, low-power X- or K-band radar transmitter. With the device's low-level emissions, you do not need a license to use it. The average detection range is 12 feet, which is more than enough to determine the sensitivity of your radar detector. You can then do a side-by-side test with your friend who's been telling you his detector is better!

Operation

The heart of the circuit (see Fig. 1) is a one-transistor oscillator that operates at a fundamental frequency of 1169.44 MHz. The 9th harmonic of that frequency is 10.525 GHz, which happens to be the center of the X-band police radar assignment. The K-band unit operates at a fundamental of 1857.7 MHz with the 13th harmonic falling at 24.150 GHz. As you probably have guessed, 24.150 GHz is right in the center of the K-band police radar assignment.

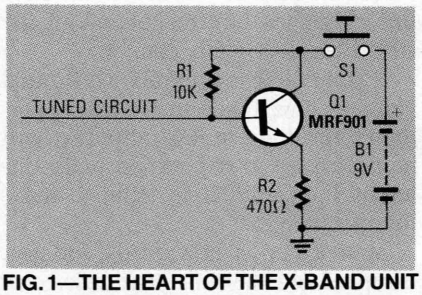

FIG. 1—THE HEART OF THE X-BAND UNIT is a one-transistor oscillator that operates at a fundamental frequency of 1169.44 MHz; the 9th harmonic of that frequency is 10.525 GHz, which happens to be the center of the X-band police radar assignment.

The oscillator uses a microwave transistor in order to maximize the X- or K-band output. The fundamental frequency is determined by the tuned circuit that is attached to the base of the transistor. The tuned circuit consists of a 50-ohm strip line that is etched onto a PC board, and then cut to the proper length during the tuning procedure.

The printed circuit board is made out of double-sided copper-clad teflon with fiberglass reinforcement. The teflon is necessary because of the high frequencies involved (standard G-10 epoxy printed circuit boards act like short circuits at frequencies above 3 GHz). Although teflon sounds exotic, it isn't, and it is readily available from the suppliers listed in the parts list.

Some people may not be familiar with strip-line circuitry. Any line that is etched on one side of a double-sided PC board will have inductance along its length and capacitance through the dielectric (the fiberglass, teflon, etc.) to the ground plane (the copper plating on the other side of the board). In a properly designed strip line, the inductance and capacitance cancel each other leaving the designer with just a resistive impedance to worry about. As it turns out, the width of the line and the thickness of the dielectric determine the resistive impedance.

In this particular case, it was determined that 50 ohms was the optimum impedance. After deciding which PC-board material would be best suited for this project, the following equation was used to determine the width of the strip line needed:

$$Z_o = (87/\sqrt{E_r + 1.41}) \times L_n[5.98H/(T + .8W)],$$

Z_o = characteristic impedance (50 ohms)
E_r = dielectric constant (2.48)
L_n = natural logarithm
H = thickness of dielectric (0.0156 inches)
W = width of line (0.038 inches)
T = thickness of copper cladding (0.0004 inches)

Once the width of the line is determined, all that's needed to finish the job is to determine the length of the line for the target frequency. (The oscillator is similar to a pipe organ where the length and diameter of a pipe determines the tone that is produced; the length of the strip line determines the resonant frequency.)

Construction

Etch the circuit board using the pattern provided in PC Service; a ready-made board is also available. The transistor has four leads; two are connected to the emitter, and you must determine which they are. Use an ohmmeter if you are not sure. (The

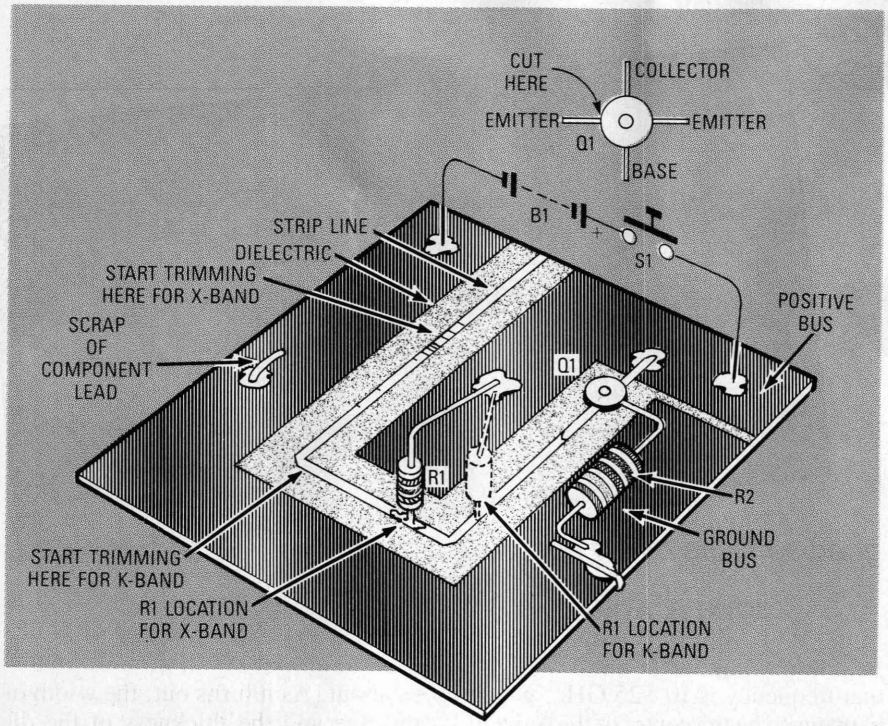

FIG. 2—PARTS-PLACEMENT DIAGRAM. Resistor R1 must be in a different location, depending on whether you're building an X- or K-band unit. Also, when aligning the unit, the strip line must be cut in a different location depending on the type of unit.

emitter leads are the only two that will exhibit a dead short from one to the other.) Cut off the left-hand emitter lead, as shown in Fig. 2.

After removing the extra lead, place the transistor in the hole on the board so that the base lead is on the strip line and the collector lead is on the positive bus, and solder them in place (see Fig. 2). Place R2 on the board and, keeping both leads as short as possible, solder one of its leads to the remaining emitter lead of Q1. The other resistor lead should go through the hole in the PC board, and soldered on both sides (a through hole, if you will). A scrap piece of component lead must go through the other hole on the left side of the board, and also soldered on both sides (another through hole).

Cut one lead of R1 so that it's ⅛-inch long. Refer to Fig. 2 for proper placement of R1 for either the X or K band. Then solder the shortened lead of R1 to the strip line so that the resistor is standing on end. The longer lead of the resistor should then be soldered to the positive bus of the PC board (see Fig. 2).

Using a silicone adhesive, glue the PC board into the enclosure that you have selected. DO NOT use a metal enclosure. The microwaves need to escape from the box, and you will defeat the entire project by using a metal box. Be sure to orient R1 so that it's closest to the front of the box, because most of the radiation is emitted from that point.

Attatch the battery and switch as shown in Fig. 2, being careful not to reverse the polarity. Route wires away from the strip line and components, because stray wires can de-tune the oscillator. Construction is now complete and you are ready to tune the transmitter (see Fig. 3).

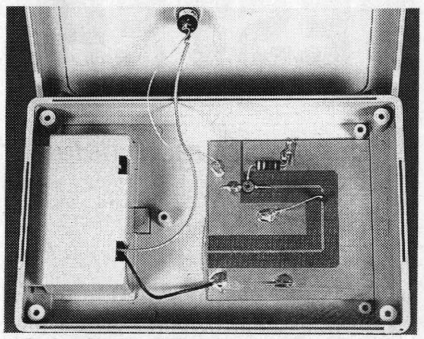

FIG. 3—GLUE THE PC BOARD into the *plastic* enclosure using a silicone-type adhesive.

PARTS LIST

R1—10,000 ohms, ¼-watt resistor
R2—470 ohms, ½-watt resistor
Q1—MRF-901 Motorola transistor for X band, *or* NE68137 California Eastern Laboratories transistor for K band.
B1—9-volt battery
S1—push-button switch
PC-board material—6 × 6-inch piece of 0.0158-inch thick teflon-fiberglass (Taconic Plastics, part number TLT-9-0150-C1/C1)
Plastic project case

Note: A complete parts kit is available from MICROSERVE, 60 Thompson Street, Maynard, MA 01754. Besides the parts, the kit also includes a custom plastic enclosure with an integrated battery holder and decorative face plate. X-band kits are $55, and K-band kits are $65. Shipping and tax extra. Spare parts list available on request.

Motorola Semiconductor Products
3102 N 56th St.
Phoenix, AZ 85018
602-952-3000 or 800-521-6274

California Eastern Laboratories
3260 Jay St.
Santa Clara, CA 95054
408-988-3500

Taconic Plastics LTD.
Petersburg, NY 12138
518-658-3202

Alignment

To align the unit, you will need a radar detector and an X-acto knife with a fine blade. Turn on the radar detector and the tester. Now make an initial cut in the strip line starting at the point specified in Fig. 2 for either the X- or K-band unit. Be sure to cut all the way across and through the copper trace. If your detector does not sound an alarm, make another cut about 1/16-inch closer to the transistor. At some point your detector will sound an alarm, and the tester will be properly tuned. Be careful not to cut too much at one time, because if you go too far you will have to carefully solder the line back together.

However, if you go just a *little* too far, you can save some work by cutting nicks in the remaining strip line (cuts that go part way across the strip line). That has the effect of making the strip line electrically longer.

If you find that your range is limited you may have tuned to the wrong harmonic resulting in low output. It will be necessary to experiment with different line lengths to achieve maximum range.

Your tester is now ready for use. Simply hold the unit near a detector and turn it on. The range of the X-band transmitter is about 12 feet, while the range for the K-band unit is about 5 to 10 feet. **R-E**

BUILD THE LAZER FAZER

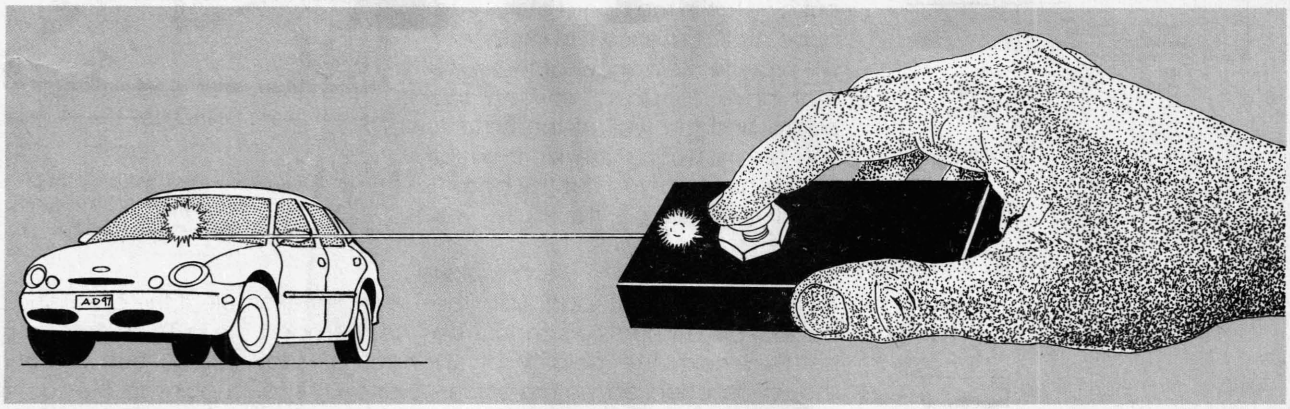

How do you know that your laser detector is really working? This simple unit will test any LIDAR detector by sending a beam that looks like a police laser-speed gun.

RICK DUKER

In recent years, a new method for monitoring traffic speed has appeared. Rather than using the Doppler shift of a microwave-frequency radar unit, a series of extremely short pulses of laser light are used to measure the speed of moving vehicles. Like radar, the time it takes for the pulse of laser light to travel to the target and back again to the source measures the distance to the target. If the distance is measured twice, the change in distance during that time can easily be converted into speed. The new system is called *LIDAR*, an acronym for *LI*ght *D*etection *a*nd *R*anging.

The radar-detector manufacturers have responded to that new technology with laser-light detectors that warn motorists of the presence of LIDAR in the vicinity. Now, nearly all radar detectors also detect LIDAR beams as well. If you happen to own one of those sophisticated detectors, you probably would like to have a way of testing it without searching the roadways for a LIDAR speed trap. Unfortunately, a LIDAR gun will set you back several thousand dollars—even if you could purchase one.

There is a low-cost alternative—the Lazer Fazer. It is a compact device that simulates LIDAR pulses with a narrow-beam infrared LED rather than a true lasing device. The simulated LIDAR signal fools a detector into reacting as if the pulses of light were coming from an actual LIDAR gun. A detector will not respond to just any flashing light source. It scans its field of view for a signature light signal, one with a short pulse duration and low duty cycle. Sensitivity tests can also be performed on different detectors to determine their various abilities.

Circuit Description. The circuit for the Lazer Fazer is shown in Fig. 1. It is built around IC1, a 555-type timer chip configured as an astable oscillator. The frequency and duty cycle of the output is set by R1, R2, and C2. The values shown generate a very narrow negative-going pulse. The negative pulses turn on Q1. That lets high-current pulses flow through infrared emitter D2. The MOSFET transistor used is ideal for that purpose because of its high input impedance, high switching speed, and low on-resistance. Those high-current pulses release the maximum output that D2 is capable of, although the average power is low due to the short pulse duration. With each pulse of cur-

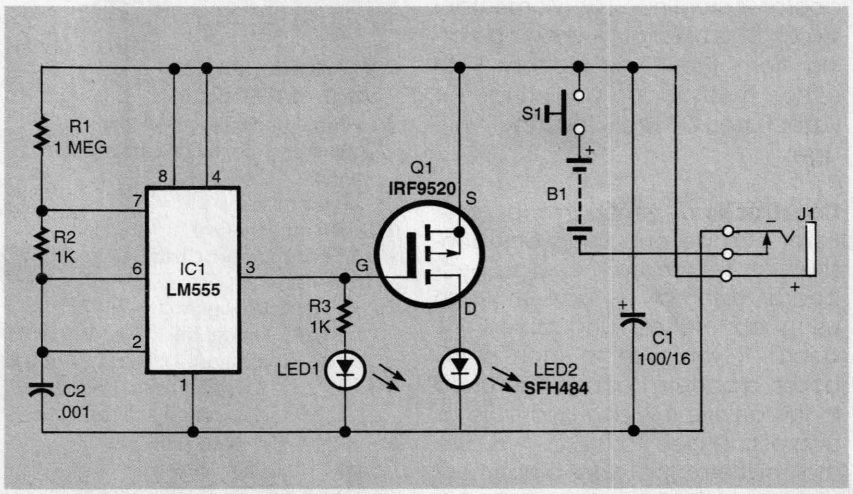

Fig. 1. The Lazer Fazer is simply a 555-type oscillator that puts out an IR signal. It can either be battery powered or plugged into an external 12-volt source.

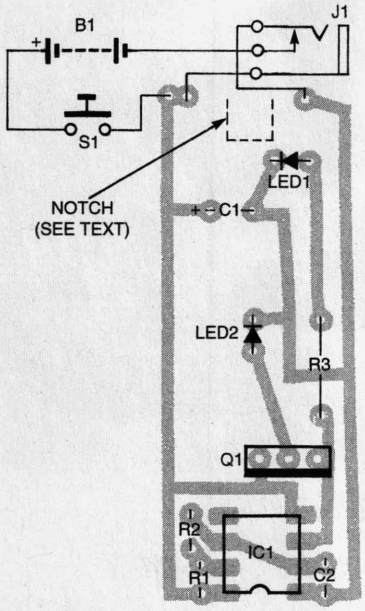

Fig. 2. If you use the supplied foil pattern for the Lazer Fazer, this parts-placement diagram shows where the components are located. If you need to route wires around the board, cut the indicated notch. The notch will prevent any wires from being pinched.

rent, D2 emits a burst of infrared energy. The infrared energy is detected by the laser detector. When D2 is off, D1 is lit to show that the unit is on.

The Lazer Fazer is designed to operate from a 9-volt battery contained inside the case or from a vehicle's 12-volt power. For the latter option, J1 is used to connect the Lazer Fazer to the vehicle's electrical system. When J1 is plugged in, the 9-volt battery is removed from the circuit, and the Lazer Fazer operates continuously. Momentary switch S1 is used only when operating from the 9-volt battery. With either method of powering the Lazer Fazer, C1 filters the input voltage.

Construction. Although the Lazer Fazer can be built using any construction technique, including perfboard, assembly is easiest when using an etched and drilled PC board. If you wish to etch a PC board, a pattern has been included in this article; it is also available as part of a kit (see Parts List). If you use that pattern, the parts-placement diagram in Fig. 2 should be followed when installing the components.

Before mounting any components to the PC board, if you are using the kit previously mentioned, cut a notch in the board at the end opposite IC1 as shown in Fig. 2. That will provide clearance for the wires that have to pass between the board and the wall of the case. If you are not using the kit, it might not be necessary to cut the board; it will depend on the case you select.

If you are going to use a socket for IC1, install that part first. The capacitors and resistors should be installed next. The polarity of C1 should be checked before soldering it to the board. Before installing D1 and D2, decide where those components will be placed in the enclosure. Drill holes in the case for the diodes. If necessary, bend the leads of D1 and D2 so that they will reach from their locations on the PC board to the holes in the enclosure. For example, if the case is held in the hand like a TV remote control, D2 should point out one end and D1 should point to the top of the case. In that way, the user will be able to easily see D1 while pointing D2 at the LIDAR detector. In any case, it is important to note the correct polarity of D1 and D2. Both diodes have flat sides on their lens to denote the cathode lead. Once the alignment and orientation of D1 and D2 are confirmed, their leads can be soldered to the circuit board. Three wires of appropriate length are soldered to the pads on the PC board as shown in Fig. 2.

The last component to be installed is Q1. It is a MOSFET device, so you must observe all standard anti-static precautions when handling the transistor. Install QI, noting the correct lead orientation; the backside of Q1 should face IC1 when installed correctly. Solder Q1 using as short a soldering time as possible to prevent overheating.

Carefully install IC1 into its socket. Be sure that pin 1 is oriented correctly. Drill appropriately sized holes in the case for S1 and J1. Switch S1 is mounted in the top of the case where it can be easily activated by hand. Glue J1 to the inside of the lower half of the case and align it with the hole drilled for it. Finally, install the PC board into the enclosure.

Solder one of the wires from the positive connection on the PC board to one terminal of S1. The remaining two wires are to be connected to the positive and negative terminals of J1. Most power cords use the center pin for the positive connection and the outer barrel for the negative connection. Check the power cord you will use

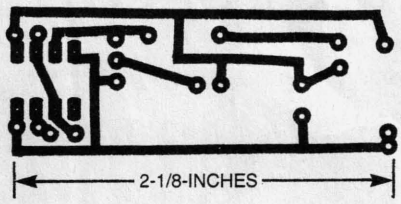

Here's the foil pattern for the Lazer Fazer. The circuit is simple enough to fit on a single-sided board without any jumpers being necessary.

PARTS LIST FOR THE LAZER FAZER

SEMICONDUCTORS

IC1—LM555 timer, integrated circuit
Q1—IRF9520 P-channel power MOSFET transistor
LED1—Light-emitting diode, red
LED2—SFH484 narrow-beam IR emitter diode (Digi-Key LT1028-ND or similar)

RESISTORS

(All resistors are ¼-watt, 5% units.)
R1—1-megohm
R2, R3—1000-ohm

CAPACITORS

C1—100-µF, 16-WVDC, electrolytic
C2—0.001-µF, ceramic-disc

ADDITIONAL PARTS AND MATERIALS

S1—Single-pole, single-throw, momentary-contact pushbutton switch
J1—Power Jack
B1—9-volt battery
PC board, enclosure, battery clip, hardware, etc.
Note: The following items are available from: Quantum Research, 17919 77 Ave., Edmonton, Alberta, Canada T5T 2S1: Kit of all parts (less battery) - $39.95; Assembled and tested unit - $59.95. Please include $5.00 for shipping and handling. All prices are in US dollars. Please make all payments with check or money order.

TAG—YOU'RE "IT!"

The Lazer Fazer is a low-cost and easy-to-build device, making it a good candidate for a high-tech version of "tag." Below is a schematic for a detector that will react to the IR pulses from the Lazer Fazer. The detector is mounted in a clear plastic case and worn on each player's clothing or belt. Armed with a Lazer Fazer, every player tries to "shoot" one another until there is only one player left.

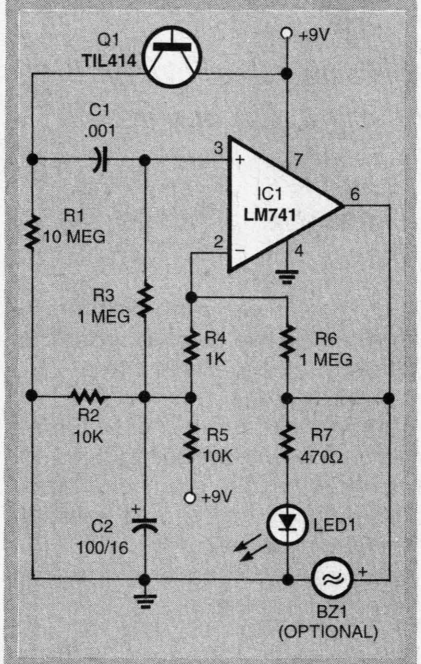

The game is best played in subdued lighting conditions. That will let the photosensor be sensitive to the Lazer Fazer's light beam. It will also be easy to see the LED indicator on the detector if a player has been tagged. The optional buzzer will also help confirm a hit or miss.

before soldering the wires to the jack. A mistake here will destroy the Lazer Fazer the first time power is applied to J1.

The third terminal on J1 is a switch that disconnects from the negative terminal whenever a plug is inserted. That switch will be used to disconnect the 9-volt battery from the circuit whenever auxiliary power is applied.

Connect the red lead from the battery clip to the other terminal of S1. The black lead of the battery clip is connected to the switch terminal of J1. Install a fresh 9-volt battery and close the case. The Lazer Fazer is now ready for testing.

Operation. To test the unit properly requires a LIDAR detector. Simply point the Fazer at the detector. If using batteries, pressing S1 should activate the detector's alarm. Once the Lazer Fazer is tested, it is ready for use.

The Lazer Fazer can operate from the 12-volt system of a vehicle. Simply plug it into a cigarette lighter jack with a suitable power cord. The LED will light, indicating that the Lazer Fazer is in continuous operation. Remember that S1 does not work when the unit is plugged into auxiliary power. With 12 volts supplied, the IR output of the Lazer will be greatest. To test the range of the device, point it out the front windshield and have a friend approach from the front with a detector facing the vehicle. Measuring the distance when the detector goes off will show the approximate usable range of the Lazer Fazer.

The main purpose of the device is to test the sensitivity of a LIDAR detector. If you have friends who own different makes or models of LIDAR detectors, you can test the various units for sensitivity and response time. It is interesting to see how different detectors respond differently. Ω

JUMPER CABLE

(continued from page 36)

provide some information on the health of the battery and alternator. It does that through five small LEDs—three that are green and two that are yellow. If you are going to be using the JCW for testing a single battery, make sure that the clamps that will not be used are not touching each other.

With the engine not running, connect the JCW to the battery to be tested. At least one of the green LEDs should light. If there are no lights or only the lowest yellow LED lights, the battery needs to be charged or replaced. If the battery passes that test, turn on the headlights. If the battery is good, the LEDs either won't change or will only drop by one level. If the level drops by more than that, the battery needs to be charged or replaced.

If you want to test the alternator, connect the JCW to the battery.

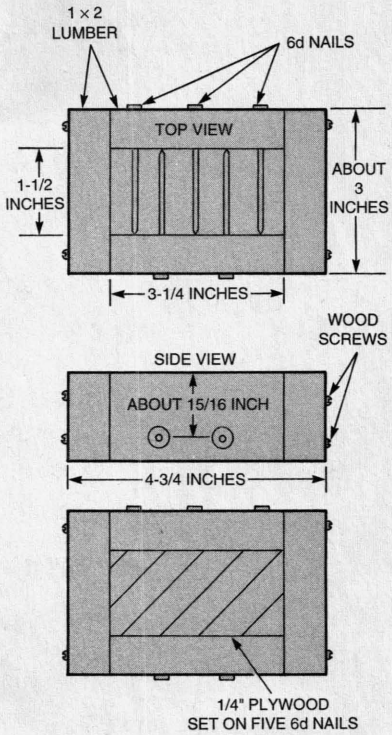

Fig. 4. If you want to pot the Jumper Cable Wizard, this wooden-mold pattern will work nicely. Use wood screws to hold everything together. If the JCW won't come out of the mold, you can always take the mold apart!

Turn the headlights on without the engine running and wait until the indicator drops by two or three LEDs. With the headlights still on, start the engine and run it at moderate speed. If the alternator is operating properly, all of the LEDs should now light.

While the JCW's voltage monitor might seem to be a bit crude, with experience and ingenuity, faulty batteries and alternators can be diagnosed quickly and reliably. Ω

ELECTRONIC GAMES

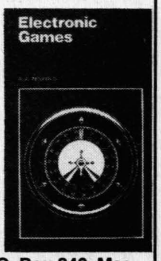

BP69—A number of interesting electronic game projects using IC's are presented. Includes 19 different projects ranging from a simple coin flipper, to a competitive reaction game, to electronic roulette, a combination lock game, a game timer and more. To order BP69 send **$8.00 (includes s&h)** in the US and Canada to **Electronic Technology Today Inc., P.O. Box 240, Massapequa Park, NY 11762-0240.** US funds only. Use US bank check or International Money Order. Allow 6-8 weeks for delivery. MA07

Pirate Radio

Shiver me timbers, here's a look inside the never boring world of clandestine broadcasting, more colorfully known as "Pirate Radio."

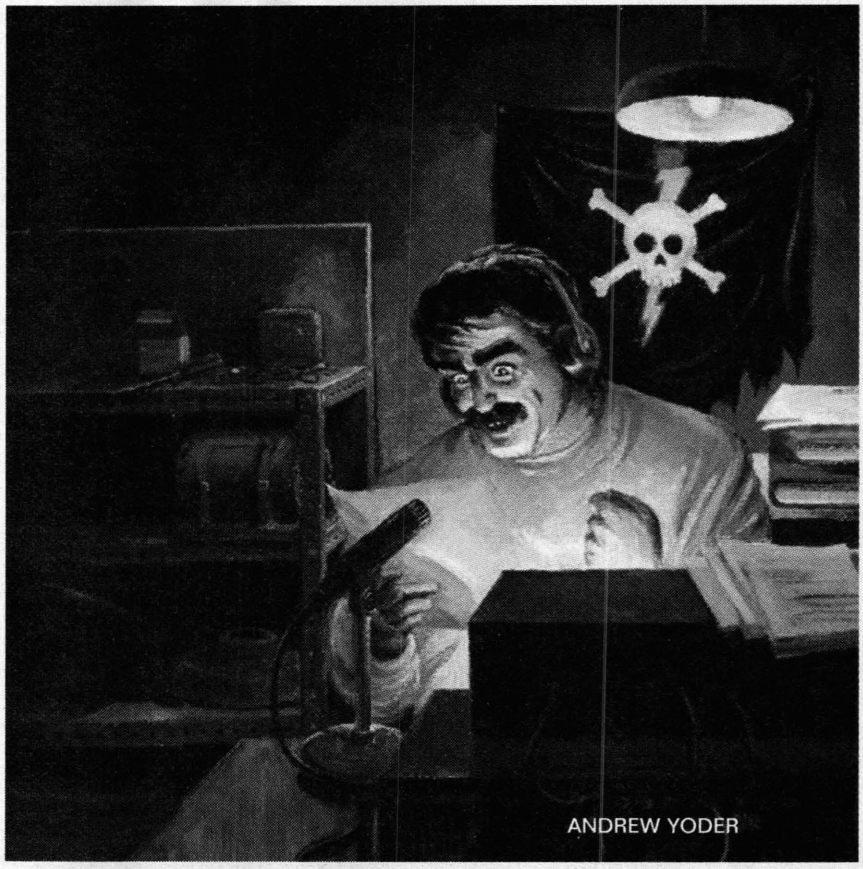
ANDREW YODER

Radio tubes are glowing in the dim, electronics-equipment-strewn room. The aroma of incense laces the air. Steve Mann tunes around the shortwave frequency of 6955 kHz one last time to check for other stations using the channel. The radio emits only the light crackle of atmospheric noise. He leans over, flicks a switch on an aging amateur radio transmitter, and punches the play button on his cassette deck. Radio Eclipse is on the air.

As the opening "signature" (interval signal) is playing, shortwave listeners from Ontario to Texas begin tuning in. Others dial up the Internet to let friends know that Radio Eclipse is broadcasting a new program.

Meanwhile, back at the clandestine studio of Radio Eclipse, the strains of "Everybody Wants You" by Billy Squire die down. Steve Mann begins the much-anticipated "News of the Week" segment. As usual, Steve mixes factual news with shortwave culture and complete nonsense...producing often-hilarious results. In the past, Mann had aired everything from barbs at sportscaster Marv Albert to announcing a "list" of Andrew Cunanan's potential victims that the station "discovered." This week, however, Mann sticks with safer targets, namely those involved with the goings-on in Washington.

After a few more songs, fake ads, station-address announcements, and more of the interval signal, Mann turns off the tube finals and puts the transmitter in standby mode to cool off. Just after turning the receiver back on, the static is broken by the words "Good show, Steve." Mann flicks off the standby switch. So ends the broadcast day of Radio Eclipse.

As you might have guessed, Radio Eclipse is a pirate station—one of those almost-mythical phenomena that have been quietly making the headlines for the past decade, but that few people seem to have heard or really know anything about. Sure, many have seen articles about Stephen Dunifer of Free Radio Berkeley, who has tied the FCC up in court for several years or about Radio Newyork International or Radio Caroline (from England), both of which broadcast from large vessels in international waters. But how many have actually heard a pirate?

Stations have been pouring on to the airwaves over the past five years in the United States and Canada. By the FCC's estimates, 300 pirate stations were broadcasting from the U.S. going in to 1998, but these numbers are certainly conservative. Miami, Florida alone has boasted approximately 20 stations in 1998! A radio pirate in your hometown might even have escaped your attention. So, then, who are these pirates and what is the hoopla all about?

ABOUT THE AUTHOR

Andrew Yoder publishes *Hobby Broadcasting* magazine. He has also written the following books about pirate radio: Pirate Radio Stations, Pirate Radio, and Pirate Radio Operations. He can be contacted at: ayoder@cvn.net or P.O. Box 642, Mont Alto, PA 17237.

has been in court with the FCC for several years over their right to broadcast. But the group has done much more than just create legal hassles for the FCC. FRB has also worked hard to spread pirate radio (called "microradio" or "microcasting" by those devoted to the cause) to the masses. Stephen Dunifer has sent out regular press releases, newsletters, and comments concerning Free Radio Berkeley in particular, and the unlicensed radio scene in general, to the FCC and major mass-media outlets across the country.

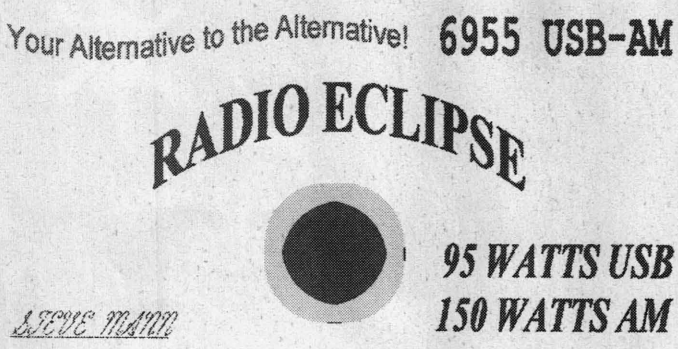

A business card from Steve Mann's Radio Eclipse pirate radio station.

The press releases and newsletters helped keep Free Radio Berkeley and other unlicensed broadcasters in the news in the San Francisco Bay area, and as a hot feature across the country. But Free Radio Berkeley did more than just inspire others to broadcast. They actually helped put other stations on the air by producing transmitter kits so that other like-minded people could have their own piece of the airwaves.

As a result, stations began popping up across the FM band around the United States, many using the FRB transmitters. The motivation was simple; most radio enthusiasts seem to believe that licensed radio has abandoned community and niche programming. Before long, companies such as Veronica, Broadcast Warehouse, and others were manufacturing higher-powered FM transmitters and marketing them in the United States. The competition lowered the transmitter prices, and even more stations began broadcasting.

Now it seems that in any city of 100,000 or greater, at least a few FM pirates are broadcasting, either on a set schedule or irregularly. The larger cities have literally dozens of pirates, some of which are broadcasting on a 24-hour-per-day/7-days-a-week basis. For example, when the FCC swept into Miami, Florida in the summer of 1998, it raided 15 different FM pirates that were broadcasting on a regular basis. Within a month of the enforcement actions at least five new pirate broadcasters, all operating on regular schedules, could be heard.

The same story is being repeated across the country. Stations begin broadcasting, the FCC closes some of them down, and more operations come to life. As the FCC raids more stations, the pirates become more resourceful and more determined. It appears that some huge events are on the horizon for unlicensed FM broadcasting.

AM Pirates. For decades, AM pirate radio mostly occurred at the top end of the AM-broadcast band. The earliest well-known AM pirates began broadcasting there in the 1960s and 1970s. From that point on, the 1615- to 1635-kHz range was pirate territory. In the late 1970s and early 1980s, pirates such as WFAT, Pirate Radio New England, WART, WDX, WENJ, KPRC, KW Radio, Free Radio 1615, and many others would have hundreds of listeners, often receiving dozens of calls during every broadcast.

Much has changed, however, since the AM "expanded band" opened in the U.S. Long-distance U.S.-based radio pirates have largely disappeared because any such stations appearing within the band are for the most part crowded out by much more powerful signals from commercial stations at night. But AM pirating lives on in other countries. Dozens of stations from the Netherlands crowd the area from 1580 to 1630 kHz, and pirates from Greece and Yugoslavia often can be heard there as well. These days, if any North American pirate would like to broadcast on a clear nighttime channel, it would be necessary to move to 1710 or 1720 kHz. But will anyone be listening?

Shortwave Pirates. For decades, the shortwave frequencies have been a favorite pirate hangout. Those on the outside might wonder why anyone would waste their time broadcasting on frequencies that many can not receive. But upon further inspection, you can see that the shortwave bands and pirate radio seem almost made for each other.

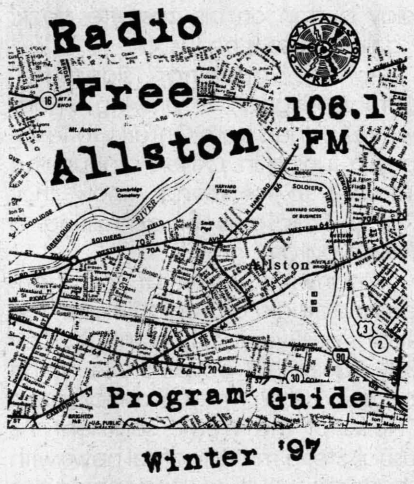

Some pirate stations broadcast on a fixed schedule and even provided a program guide such as this one from a suburban Boston operation.

The greatest advantage of shortwave is its ratio of signal coverage to power. The typical 10-watt FM station will only cover anywhere from a few blocks to a few miles, depending on the height of the antenna and the obstacles in its path. However, with a decent antenna, 10 watts on shortwave

can easily cover several hundred miles during the daytime or 1000 miles at night.

Obviously, if shortwave signals can cover such a huge territory, these stations are much more difficult to locate using direction-finding (DFing) equipment. The pirate could be anywhere! Also, shortwave signals can reflect off large buildings, hills and mountains, water towers, etc. and provide false signals for those who are attempting to locate the station.

The vast distances and many borders traversed by shortwave signals give those frequencies the final advantage. Who wouldn't feel compelled to tune in mysterious broadcasts from great distances? For example, in the 1970s and 1980s, Russian pirates, called "radio hooligans" by Soviet officials, often broadcast in the 2000- to 4000-kHz region. After the fall of communism in the Soviet Union, the Russian pirate Radio Without Borders International was heard all over Europe (and even in Canada) with its pro-Western pop music format.

Recent Enforcement Actions. Until relatively recently, pirate stations, both on shortwave and FM, have been broadcasting with reckless abandon, sometimes for several years. Many of those FM stations bluntly challenged the FCC's rules and their right to enforce them. These stations, particularly the ones that operated on a regular schedule, were staffed by volunteers from the community and often operated from a fixed location. For the most part, the shortwave stations were more careful and operated only a few hours per month, but still mostly from homes or other permanent locations.

But in November 1997, the FCC began to put the squeeze on much of the carefree broadcasting. The first action was an attack on a trio of FM stations (87X, Lutz Community Radio, and The Party Pirate) in the Tampa, Florida area. Those raids were notable because the FCC exercised considerable force to close down the community stations. Those who owned the stations were awakened in the early morning hours, with SWAT teams aiming automatic weapons at them. While the station owners were cuffed, face down on the floor, agents from numerous government agencies rifled through personal possessions, confiscating radio equipment, audio equipment, and music collections.

A QSL card from 1970s pirate WFAT in New York City.

The enforcement activities continued throughout 1998. Outspoken opponents of the FCC, such as Radio Mutiny (Philadelphia), Free Radio Berkeley, and others were all closed down. The FCC claimed more than 200 raids against pirates in 1998.

But the stations haven't disappeared; if anything, they've become more resourceful. Radio Mutiny was perhaps the master of strategic publicity. After a publicity campaign, the station broadcast from the site of the Liberty Bell. They stated that if their voice of liberty was wrong, then the FCC was justified in raiding the station there, in front of our nation's symbol of liberty and the TV cameras. The FCC was apparently camera shy and the broadcast was a success. Armed with the promise of a media blitz, a female announcer broadcast from their studios completely naked that night, daring the FCC to close the station. Again, another success. When Radio Mutiny was eventually raided, the FCC waited until no one was around and the station was off the air.

At a low-power FM conference in Washington, DC in October 1998, attendees marched to the buildings of the FCC and the National Association of Broadcasters (NAB). As the parade reached the front of

Some Active North American Shortwave Pirates

Blind Faith Radio	Testing and 1960s/1970s album rock.
Free Hope Experience	A weird mixture of UFOs, free speech, and comedy skits.
Mystery Radio	All-instrumental synthesized music—very mysterious!
Radio Azteca	Homebrew comedy all related to shortwave listening.
Radio Eclipse	A wide variety of music and elaborate parodies.
Radio Free Speech	Professional mix of novelty music, fake ads, and free speech editorials.
Radio Metallica Worldwide	Rock and metal music, plenty of R-rated discussions.
WACK	Rock music and telephone call-ins.
WEED	Collage-style mixes of rock and punk music, with snips of audio from speeches and movies.
WLIQ	Mostly rockabilly music.
WLIS	"We Love Interval Signals"—interval signals from stations around the world and some rock music.
WMPR	Techno music and brief IDs.
WSRR	"Solid Rock Radio" Rock, rap, and soul music, with some Christian sermons.

the FCC building, a 10-watt FM transmitter was turned on and Radio Mutiny began broadcasting, speaking out against FCC control of the airwaves. The FCC again took no action.

In late November, two radio activists in Berkeley, California broadcast for days, 50 feet up in a redwood tree as "Tree Radio Berkeley." According to several reports, the pair had received considerable media attention and vocal support from people in the community. It was also reported that the FCC's first attempt to serve the pair a Notice of Apparent Liability failed because they couldn't find a way to get the papers up the tree!

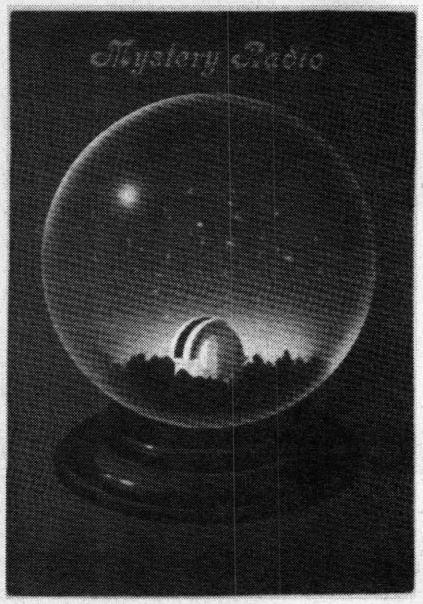

Mystery radio is one of a number of active (as of this writing) North American shortwave pirates. See the sidebar for others.

On shortwave, activity in the United States has decreased significantly following raids on four different pirates around the country this past October. Unlike the direct-confrontation approach taken by many FM stations, the shortwave pirates have simply disappeared, apparently awaiting the time that "the coast is clear."

Tuning In To Pirate Radio Stations. If you live in a city or in the suburb of a major city, you have the opportunity to hear FM pirates. But they can be difficult to locate. In many large cities; the radio spectrum is nearly full. The best way to look for FM pirates is to get to know the broadcast spectrum and frequently tune the clear channels. Otherwise, it's a good idea to regularly read the alt.radio.pirate newsgroup on the Internet, check the local record shops and alternative weekly papers, and read *Hobby Broadcasting* magazine (see the "About the Author" box). Once you know that a station is active on a given frequency, then you can tune in whenever you have a chance and see if anything turns up.

Shortwave is very different. You don't need to really know a huge variety of frequencies. Instead, most pirates congregate around several well-known, clear frequencies. The current prime frequency area is plus or minus several kilohertz of 6955 kHz, just below the 40-meter amateur band. Also, one of the best-heard pirates of recent years is Radio Metallica Worldwide, which has been using 7415 kHz when a licensed station (WBCQ) that also uses that frequency is off the air. Most pirates broadcast during the weekend afternoons and evenings, although when activity was peaking in 1997 and 1998 (before the FCC raids), weekday-evening broadcasts were not uncommon.

The European pirates typically use the frequencies between 3900 and 3950 and also 6200 to 6300 kHz. The former range is used primarily at night and the latter is used during Sunday mornings. Often, more than one and sometimes two dozen stations broadcast every weekend, but these are very difficult to hear in North America because 3900-3950 kHz is part of the North American 80-meter ham band and signals in the 6200- to 6300-kHz range don't travel far in the daytime.

(Continued on page 44)

The History Of Unlicensed Radio

Without a doubt, pirate radio goes back to the earliest days of broadcasting. The first broadcasts ever were made by Reginald Fessenden on Christmas Eve 1906. Just like the pirate broadcasts that would appear nearly a century later, Fessenden's program appeared on a holiday without a schedule; was relatively short; featured variety show music, talk, and readings; and it surprised those who tuned in. Of course, Fessenden's broadcasts were also unlicensed. According to many accounts, these types of unlicensed, hobby broadcasts occurred through the teens, up through the early 1920s when the Federal Radio Commission (predecessor of the FCC) banned unlicensed broadcasting and broadcasting by amateur-radio operators.

It wasn't long until pirates began actively challenging the authority of the FRC. The first-known "true" pirate was WUMS ("We're Unknown Mysterious Station"), which operated irregularly from the banks of the Ohio River from 1924 until 1948. Station operator David Thomas even built a secret transmitter into a table and managed to foil the FCC in court in 1938 and 1948—even though he had been sentenced to four years in prison and an $8000 fine. The real end for WUMS came not from the FCC, but from the operator himself. Thomas died of cancer in 1983, soon after testing a new transmitter that would have put WUMS back on the air.

Other early mentions of pirate radio are difficult to find, but are recorded, nonetheless. For example, *Zenith Radio: The Early Years* by John Bryant and Harold Cones features a photo from when the Zenith flagship radio station decided to defy the FRC's ruling concerning their frequency in 1927. The station staff all donned pirate costumes for the broadcast! And a 1930s issue of *RADEX*, a radio-listening magazine, mentions one listener who received QSL cards from several different Ohio AM pirates.

Pirate radio slowed down for World War II, replaced instead by clandestine radio and espionage. The Cold War of the 1950s also was tough on the independent broadcasters. But as the commercial pirates (such as Radio Caroline, Radio London, Radio Mercur, Radio City, and others) began to take to the airwaves off the coast of Northern Europe in the late 1950s and early 1960s, pirate radio suddenly caught the interest of a new generation. In addition to inspiration from the Europeans, American enthusiasts were aided by then-inexpensive World War II surplus equipment, Lafayette phono oscillators, and such underground works as *The Anarchist Cookbook*.

By the 1970s, pirate radio was a fully established niche and some radio hobbyists even labeled themselves as "pirate radio listeners." The situation was especially well entrenched in Europe, where some shortwave pirates were receiving literally hundreds of letters for just a Sunday morning broadcast. Activity was not nearly as organized in North America during the 1970s, but still numerous stations were active during the decade.

You can Build Gadgets!
Here are 3 reasons why!

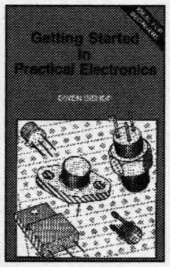

☐ **BP345—GETTING STARTED IN PRACTICAL ELECTRONICS...$6.99**
If you are looking into launching an exciting hobby activity, this text provides minimum essentials for the builder and 30 easy-to-build fun projects every experimenter should toy with. Printed-circuit board designs are included to give your project a professional appearance.

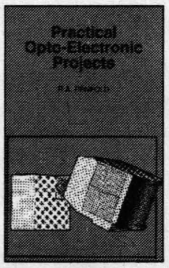

☐ **BP349—PRACTICAL OPTO-ELECTRONIC PROJECTS $6.99**
If you shun opto-electronic projects for lack of knowledge, this is the book for you. A bit of introductory theory comes first and then a number of practical projects which utilize a range of opto devices, from a filament bulb to modern infrared sensors and emitters—all are easy to build.

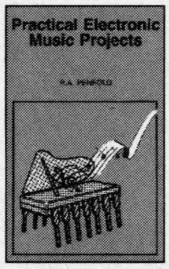

☐ **BP363—PRACTICAL ELECTRONIC MUSIC PROJECTS $6.99**
The text contains a goodly number of practical music projects most often requested by musicians. All the projects are relatively low-in-cost to build and all use standard, readily available components that you can buy. The project categories are guitar, general music and MIDI.

Mail to:
Electronic Technology Today, Inc.
P.O. Box 240
Massapequa Park, NY 11762-0240

Shipping Charges in USA & Canada

$0.01 to $5.00	$2.00	$30.01 to $40.00	$6.00
$5.01 to $10.00	$3.00	$40.01 to $50.00	$7.00
$10.01 to $20.00	$4.00	$50.01 and above	$8.50
$20.01 to $30.00	$5.00		

Sorry, no orders accepted outside of USA and Canada. All payments must be in U.S. funds only.

☐ Number of books ordered.

Total price of books..... $ _____
Shipping (see chart) ..... $ _____
Subtotal ..... $ _____
Sales Tax (NYS only)..... $ _____
Total enclosed ..... $ _____

Name _____
Address _____
City _____ State ____ ZIP _____

Please allow 6-8 weeks for delivery. ET03

and the IC sockets, you are ready to insert the components and test your BreadBlox.

A 7800-series voltage regulator has leads that are slightly larger than the holes in the board. If you are using that type of regulator on the voltage-regulator module, the leads will have to be cut with a pair of diagonal cutters so that they will fit into the holes in the board. That will give the 7800-series regulator a better mechanical fit to the board. Invariably the regulator will be grabbed when removing the regulator module from the breadboard, so that component can use all the help it can get!

You'll find the BreadBlox are as handy to have in your experimenter's box as they are fun to use. After using them once or twice, you'll probably wonder how you ever got along without them.

The BreadBlox can also be of benefit to instructors in high school vocational programs, trade schools, and college labs. Not only can the BreadBlox be used to teach soldering skills to beginning students, they can then be used while the students begin learning simple circuits.

Note that we've just scratched the surface in this article. Every builder has favorite circuit subassemblies that he or she uses repeatedly. There is no reason that any of them can't be successfully implemented as a BreadBlox module. Please feel free to send any ideas that you might have for future modules to the author; the most popular ideas might be translated into a next-generation BreadBlox. Send your ideas to melton@startext.net. Ω

PIRATE RADIO

(continued from page 30)

However, because of the recent FCC raids, one European pirate, SWRS (Shortwave Relay Service) is currently heard in North America more than most of the stations from this continent. SWRS relays programs from many different pirates on 21,450, 11,470, and 7,490 kHz on most weekends. In the East, 21,450 kHz often fades in for a little while from 1200-1400 UTC. 11470 can be heard for longer amounts of time, but with a weaker signal, and 7490 is rarely heard.

The Future Of Pirate Radio. Whether you call it "pirate" radio, "microbroadcasting," or "LPFM," unlicensed broadcasting has existed since the earliest days of radio. For years, people have speculated that the diversity of the commercial stations would eliminate pirate broadcasting. Instead, licensed radio (both public and commercial) has become more homogenized. As more people are compelled to support the pirates, the FCC is stepping up its enforcement. Unless the FCC begins to implement unlicensed broadcasting bands, the pirate radio conflict will continue to make headlines across the country. Stay tuned. Ω

What Do I Need To Hear Pirates?

Hearing shortwave pirates does require some specialized listening equipment, but you don't need a wall of equipment that could give NASA a run for its money. Of course, the first requirement is a shortwave receiver. The receiver doesn't have to be the latest in Stealth technology, but it must be more sensitive than the "boom boxes" that include shortwave bands. Typically, any receiver that is capable of tuning in SSB (single side-band) signals will tune in at least half of the pirates broadcasting in North America.

SSB reception is important because most pirates from this continent broadcast in the USB mode. Some of the portables that do well for receiving pirates include the Sony 7600 and 2010, Grundig YB-400, Sangean ATS-909, and the Drake SW-8. Also, any tabletop model should do quite well for receiving pirates.

You don't need a massive log-periodic or rhombic antenna on a few acres to hear pirates, but an external antenna certainly will help. On tabletop receivers, the antenna should be at least 20 feet long (although a longer antenna or a dipole will help). Anywhere from 10 to 40 feet of wire stretched out, with one end stripped and wrapped around the whip antenna of portables, will considerably raise the signal levels. Be aware that long antennas could cause damage to portable receivers, such as the Sony 2010.

Finally, a cassette recorder is helpful so that you can record programs for posterity. A notebook will help you to log all of the stations that you hear.

BUILD THIS Stereo Compressor

Designed to lower the audio blasting that goes with TV-commercials, the unit also serves as a studio sound manipulator!

JULES RYCKEBUSCH

AN AUDIO COMPRESSOR IS AN ESsential tool for audio processing and it is commonly found in recording studios. Most recording studios have a selection of compressors, each chosen for some specialized feature or nuance. Your home may not be a professional recording studio, but you do need our Stereo Compressor, so read on.

As the device's name implies, the Stereo Compressor compresses or limits the dynamic range of an audio signal. (Make sure you read the sidebar How Compressors Work.) In a recording studio, compressed audio prevents tape-recorder overload during loud passages without losing quiet passages in the noise floor (hiss). Before compressors were invented, the recording engineer would ride the gain by manually adjusting the signal level. Compressors are commonly used to record vocalists and acoustic instruments, especially those that have large dynamic ranges. Compressed audio can also be used to create artificial effects while recording, such as increasing the apparent sustain of an instrument or completely squashing the level of a signal. We will learn how to accomplish these audio effects later.

Compressors can also be abused. Have you ever wondered why TV commercials sound louder than regular TV programming? Well, the producer of the offending TV commercial has used a large amount of compression on the audio tracks and then boosts the gain to just below distortion level. The end result is an apparent increase in loudness to the listener. This works because modern TVs and home theaters have a large dynamic range for the audio signal.

Film and TV producers take advantage of the dynamic range available to them by recording normal conversation and background sounds 6 to 12 dB below the maximum signal level. Then for dramatic effect, music and sound effects such as explosions can be that much louder than the dialogue track. This is very noticeable when watching a movie on a high-fidelity video tape recorder. In fact, for late-night viewing, when you are *trying* to be quiet, you have to turn the TV up just to hear the dialogue and then quickly turn it down when the car chase scene comes crashing into your living room. But, with the Stereo Compressor, you don't need to constantly ride the gain. It will automatically do that for you!

When you patch the Stereo Compressor between your hi-fi VCR and your stereo sound system, you can enjoy listening to movies late at night in full fidelity, at low volume, without being blasted out of your chair when Rambo raids your living room. You can also use the unit to prevent tape (recording) overload while making home audio recordings.

How it is done

The block diagram of the Stereo Compressor is shown in Fig 1. The input signal is fed to a voltage-controlled amplifier

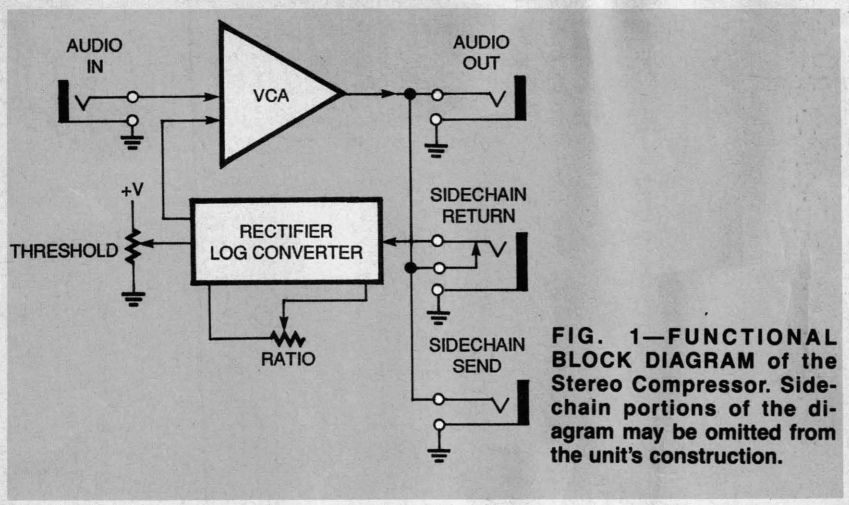

FIG. 1—FUNCTIONAL BLOCK DIAGRAM of the Stereo Compressor. Sidechain portions of the diagram may be omitted from the unit's construction.

(VCA) that has a nominal gain of unity. Some of the output signal is fed to a precision rectifier followed by a logarithmic converter circuit. The output of this block is a DC voltage proportional to the log of the average level of the input signal. By sending some of this DC control voltage to the VCA we automatically reduce the gain of the VCA when the input signal exceeds a user-determined threshold level. It is important to note that we determine the signal level after the VCA and not before. This allows the output level to increase and sound normal, but not increase as much as the input signal does. By varying the amount of feedback we adjust the compression ratio, which in conjunction with the THRESH control, determines the operating characteristics of the compressor.

The optional *sidechain* jacks permit external processing of the audio signal or substituting a completely different audio signal as the control signal. This add-on circuitry lets the user experiment and achieve some useful audio effects.

How it works

Figure 2 is the schematic diagram of the Stereo Compressor. The device has two independent channels of compression, right and left. The heart of the circuit is the SSM2120 dual dynamic range processor integrated circuit IC3. The SSM2120 features two complete dynamic range processors. Each one consists of a voltage-control amplifier, a logarithmic converter, and a precision rectifier. The chip also features a dynamic range of 100 dB at only .01-percent total harmonic distortion at +10 dB input. The remainder of the Stereo Compressor circuit consists of input and output buffers, the control circuitry and the comparator.

Since the electronics for both channels is identical, we will look at the right channel in detail. The input audio signal from J1 goes to an inverting buffer circuit consisting of R40 and R44 and IC1-b. Its output signal (IC1-b, pin 7) is coupled to the signal input on IC3, pin 8, via C4, which blocks any DC component of the input signal. The SSM2120 chip is actually looking for a current input source, and R43 provides the proper amount of current to the chip. The RC filter formed by C8 and R18 eliminates any stray RF interference.

The output signal from the internal VCA of IC3 (pin 4) is actually a current signal. It is restored to a voltage signal by current-to-voltage converter IC1-a and its feedback resistor R46. The signal from IC1-a, pin 1 is routed to output stage amplifier IC5-a via R34. The output signal from IC5-a, pin 1, is coupled via R35 and C9 to jack J3. OUTPUT potentiometer R55 lets you adjust the unit's gain.

The output signal is also sent to the rectifier input (IC3, pin 9) via R36 and C7 either directly, or via the optional side-chain jack circuitry including R50. The side-chain jacks consist of a standard 1/4-inch open-circuit OUT phone jack (J7) and a 1/4-inch IN phone jack (J8) with a normally-closed switch built into them. These jacks form a normalized patch point for additional audio processing. With nothing plugged into J8, the signal path is uninterrupted. By inserting a phone plug into the side-chain IN jack (J8), the normal signal path is broken and either the processed original signal is sent to the rectifier input, or a completely different (new) signal is sent to the rectifier input. We will later see how to use this feature for some really powerful audio processing.

But first, the control side of the house. Resistor R22 provides a reference current to the log-averaging circuit within IC3 via pin 2. It also forms an RC timing circuit with C5. This RC circuit determines the response time for the compressor. The time constant is set so that the compressor will respond rapidly without distorting.

Potentiometer R51 along with other resistors, develops the threshold level signal. The voltage from the wiper of R51 is sent to the threshold input of IC3 (pin 1) via R42. Another resistor R41 across the threshold pin 1 and the control output pin 3 establishes the internal gain of the control stage. The control output signal from pin 3 goes to a voltage-divider network centered around potentiometer R53 then to the inverting VCA input of IC3 (pin 7). A positive voltage on this input reduces the VCA gain, which is what we need to make the compressor work. Note that both the inverting and non-inverting control inputs (pins 5 and 7) are tied to ground via R5 and R7. The control inputs must remain close to ground potential for proper operation. A 6-millivolt change in voltage at these control pins causes a 1 dB change in VCA output. Diodes D6 and D7 ensure a unipolar control voltage. Potentiometer R53 is the compression RATIO control. It gives

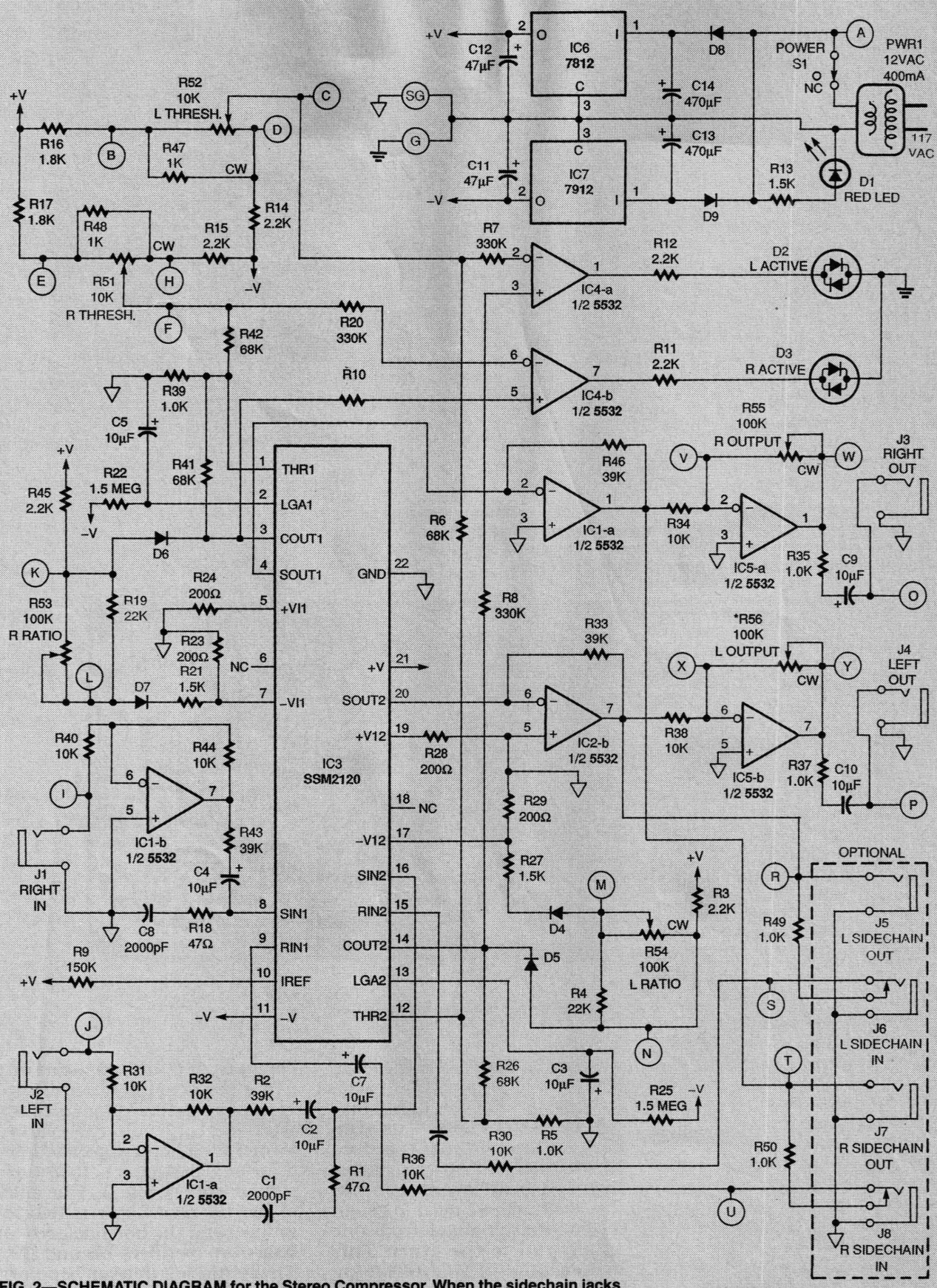

FIG. 2—SCHEMATIC DIAGRAM for the Stereo Compressor. When the sidechain jacks are included, the unit is designated as the Stereo version by PAiA. The Home Theatre version eliminates the jacks.

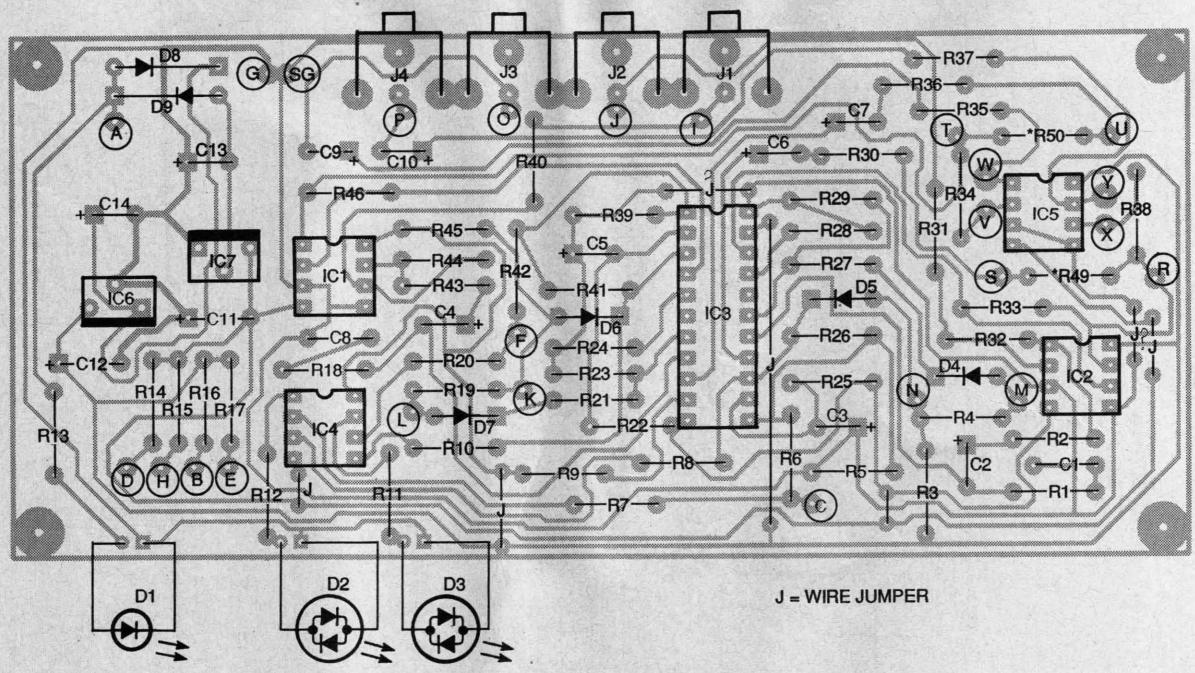

FIG. 3—PARTS PLACEMENT on the PAiA PC board. The silk-screen markings on the board provide an additional assist for the assembler. Resistors R49 and R50 are shown in place for the Home Theatre version. The studio version of the Stereo Compressor has these resistors mounted on jack terminals.

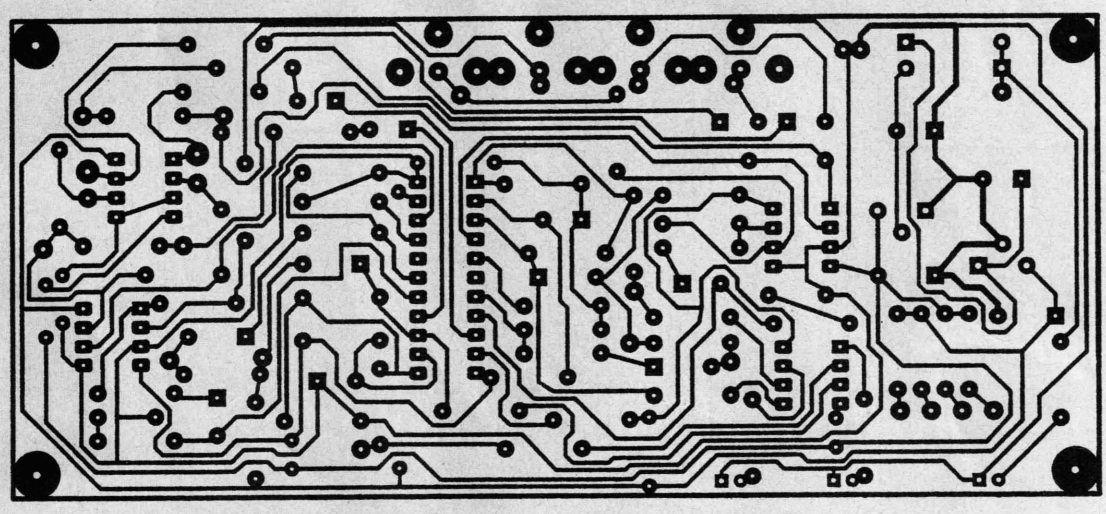

BOTTOM VIEW of the PC board, shown same size, details the foil pattern home-brew experimenters must assemble.

an adjustable compression ratio of 2 to 1, all the way to about 25 to 1.

The last portion of the circuit is the comparator formed by IC4-b, two input resistors R10 and R20, a bicolor light-emitting diode LED3, and current limiting R11 for the light-emitting diode D1. Notice that op-amp IC4-b is a comparator. Normally it is unwise to use an op-amp for this purpose because the output stage saturates, which will slow down the comparator's response time. (Note: D1 through D3 are light-emitting diodes or LEDs. This symbol identification code was used in this story in order to agree with PAiAs kit symbolism.) In this instance, we need to get an output that changes from one supply rail to the other. This makes dual-LED interfacing very simple. Along with being an excellent audio op-amp, the NE5532 functions well as a comparator in this application.

The power supply circuit consists of an externally connected Wall-Wart 12-volt AC transformer PWR1 and associated diodes and capacitors. (See top-right corner of Fig. 2.) One side of the 12-volt AC line is tied to ground and the hot side goes to half-wave rectifiers D8 and D9. These diodes deliver bipolar, unfiltered DC, and each supply is filtered by electrolytic capaci-

Continued on page 72

STEREO COMPRESSOR

continued from page 40

tors C13 and C14. Even though PWR1 is rated at 12-volts AC, the filter capacitors charge closer to the peak value of the 12-volt AC, and just about 15-volts DC is delivered to the +12-volt DC regulator IC6 and –12-volt DC regulator IC7. The output of each voltage regulator section is filtered for decoupling purposes by electrolytic capacitors C11 and C12.

Two ground systems are used in the Stereo Compressor, one for power return and the other for signal return. This design practice reduces the possibilities of ground loops that introduce unwanted AC hum to the audio signals.

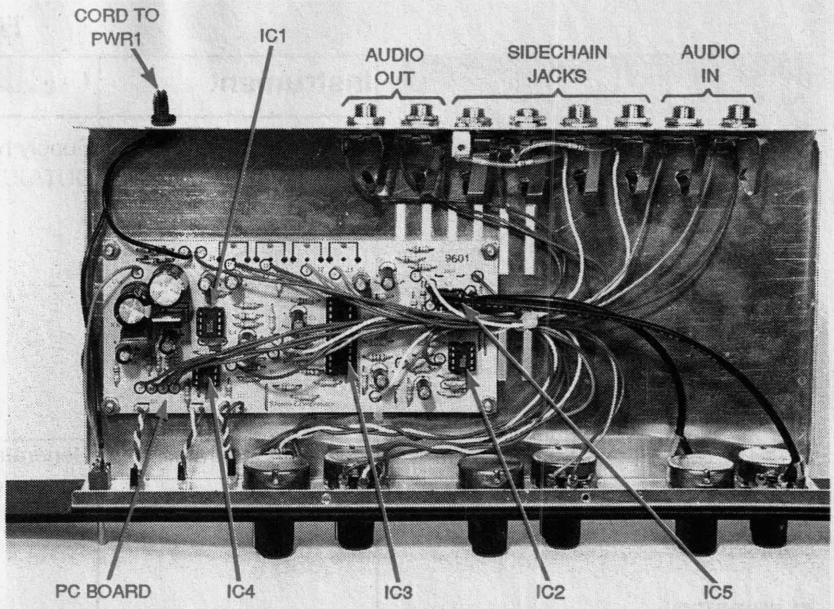

BIRD'S EYE VIEW of the Stereo Compressor before the chassis cover is secured in place. Note the neat interconnection between the PC board and front and rear panels.

Construction

Assembly of the Stereo Compressor is relatively straightforward. PAiA Electronics has complete kit of parts available for the Home Theatre version (no sidechain jacks) and the Studio version (includes sidechain jacks). If you want to roll your own, the circuit can be built on a Radio Shack experimenter's PC board or you could copy the same-size drawing of the circuit board provided in these pages and make your own board. The SSM2120 chip (IC3) is available from several sources including PAiA, Newark and Allied. The other parts are common garden variety types available from local and mail-order parts suppliers. If you do breadboard the circuit, make certain you use good grounding techniques. Return all signal and power grounds to one common point to eliminate any ground loops. Should you elect to use the PAiA circuit board, the circled letters in Fig. 2 are termination-point identifiers for hookup wires that run from the front and rear panel-mounted parts to the PC board. These interconnections are shown in Figs. 3 and 4.

The three light-emitting diodes D1 through D3 require lead extensions made from #22 insulated hookup wire. Mark the leads so that you can readily identify the anode and cathode terminals. Twist the leads of the LEDs and cut their length so that the LEDs will fit into the

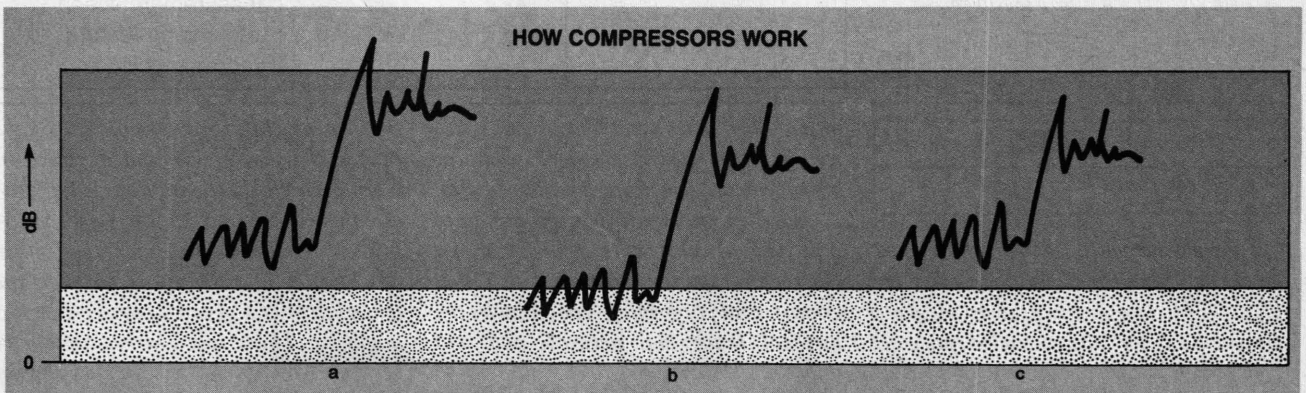

The gray band is the usable dynamic range of a quality audio tape. The dotted band below the gray band is the inherent tape noise (hiss) common to all tapes. The range (height) of these bands varies with tape quality. The audio signal in (a) shows a loud passage that is too loud for the listener, so the volume was turned down (b) to lower the loud passage in the tape's dynamic range. However, the quiet passage was lowered into the noise band common to all tapes. The quiet passage is either lost in the hiss or will sound appalling when played back. A compressed audio signal of the same passage (c) permits the quiet passages to be recorded above the hiss in the tape's usable dynamic range while the loud passage is reduced in volume for the listener's pleasure.

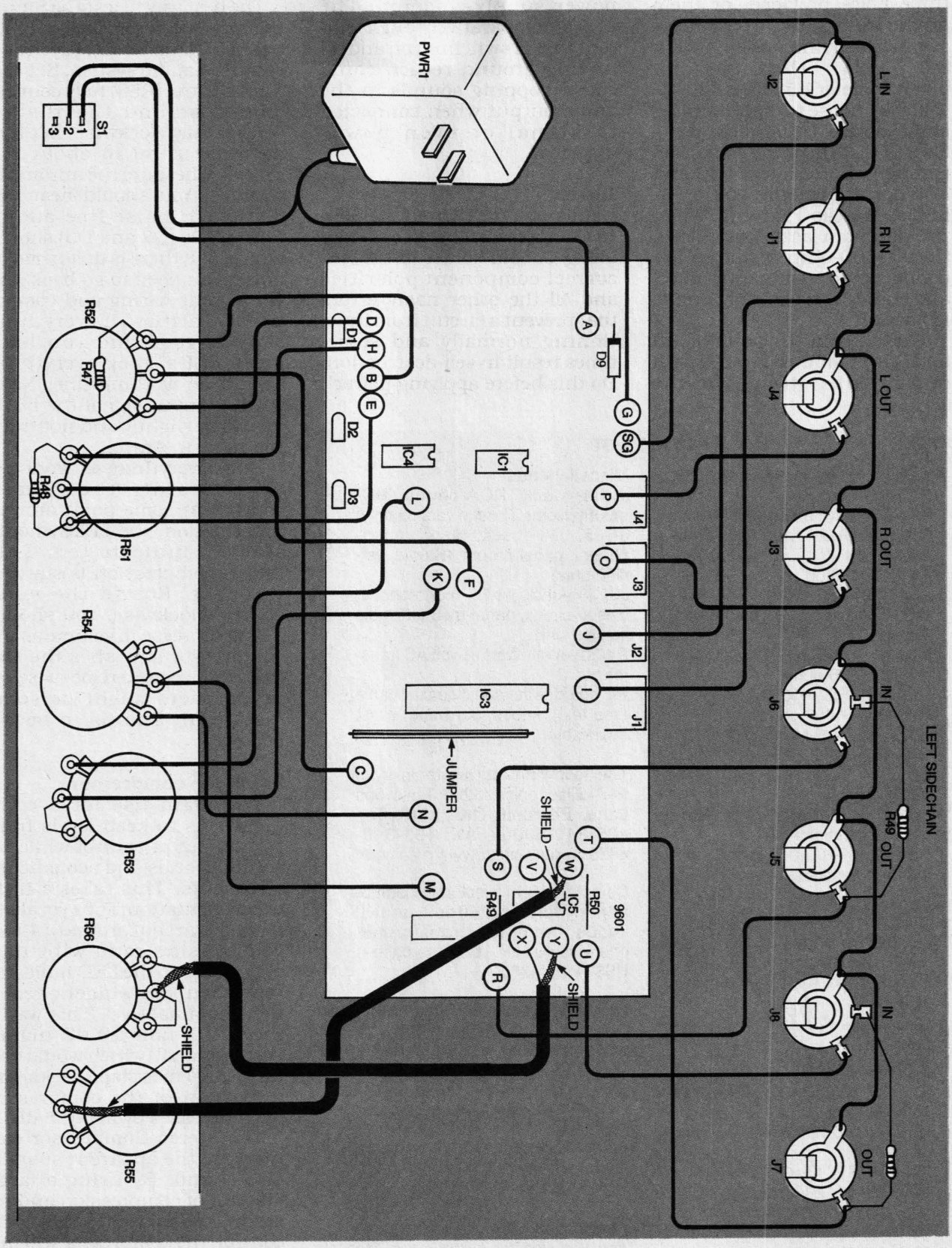

FIG. 4—INTERCONNECTING THE PC BOARD with the front and rear panel parts is simplified by PC board circled markings. The long cable runs from the board's output stage to two front-panel controls, which requires using thin, flexible, audio, coaxial cables such as the RG-174/U type. The unit's step-down power transformer PWR1 is contained in a wall-plug casing that plugs into a power outlet.

three holes provided for them on the front panel. These holes are between the POWER switch S1 and the THRESH potentiometer R52 (See Fig. 4).

If you choose to omit the sidechain option (*A big mistake*—Editor), eliminate jacks J5 through J8. Resistors R49 and R50 normally mount on the terminals of jacks J5 and J7. When the sidechain jacks are omitted, these 1000-ohm resistors are connected to terminals R and S and S and T, respectively, on the PC board.

The light-emitting diodes (D2 and D 3) combined ground path must return straight to the power supply common. The LED's comparatively high current that is switching on and off in this ground return could cause popping sounds in the audio output when connected to signal or even power grounds.

Testing

After you have wired the Stereo Compressor, check for solder bridges, cold-solder joints, incorrect component polarities and all the other nasty errors that prevent a circuit from functioning normally and sometimes result in self-destruction. Do this before applying power!

PARTS LIST

All fixed resistors are ¼-watt, 5%.
R1. R8—47-ohms
R2, R33, R43, R46—39,000-ohms
R3, R11, R12, R14, R15, R45—2200-ohms
R4, R9—150,000-ohms
R5, R35, R37, R39, R47-R50—1000-ohms
R6, R26, R41, R42—68,000-ohms
R7, R8, R10, R20—330,000-ohms
R9—150,000-ohms
R13, R21, R27—1500-ohms
R16, R17—1800-ohms
R22, R25—1.5-Megohm
R23, R24, R28, R29—200-ohms
R30-R34, R36, R38, R40, R44—10,000-ohms
R51, R52—10,000-ohm panel-mount potentiometrer
R53-R56—100,000-ohm, panel-mount potentiometer

Capacitors
C1, C8—2000-pF, ceramic disk
C2-C7, C9, C10—10-µF, 16-volt, electrolytic
C11, C12—47-µF, 16-volt, electrolytic
C13, C14—470-µF, 25-volt, electrolytic

Semiconductors
IC1, IC2, IC4, IC5—5532 dual low-noise op-amp
IC3—SSM2120 dynamic range processor
IC6—7812 +12-volt regulator
IC7—7912 –12-volt regulator
D1—Light-emitting diode, red
D2, D3— Light-emitting diode, bi-color, red and green
D4-D7—1N4148 silicon signal diode
D8, D9—1N4001 silicon power diode

Miscellaneous
J1-J4—Jack, RCA-phono, PC-mount (Home Theatre version only)
J1-J5, J7— Jack, ¼-in., mono-phone, panel-mount (Studio version only)
J6, J8—Jack, ¼-in., mono-phone, closed-circuit, panel-mount (Studio version only)
PWR1—Wall-Wart 12-volt AC transformer
PC board, wire, audio coaxial cable (see text), knobs, hardware, case, solder, etc.

The following are available from PAiA Electronics, 3200 Teakwood Lane, Edmond, OK 73013. Tel: 405-340-6300. FAX: 405-340-6378. Email: http://www.paia.com.

Complete kit of electronic components including circuit board, knobs, wall-plug transformer, phone jacks, etc., but less case—US$74.75 #9601K

Home Theatre desk-top case, punched, anodized, legended, with wood end caps and hardware—US$19.25 #9601DTC

Studio rack-mount case, standard 19-in. wide, 1-¾-in. high, punched, anodized, legended front panel. Includes 1/4-in. jacks and all hardware—US$29.50 #9601RMC

Please add US$7.00 for shipping and handling for kit orders in the USA.

PC board only—$22.50 #9601PC (shipping prepaid)

The best way to test the Stereo Compressor is to connect it between a CD or cassette deck and your hi-fi audio system. Set the RATIO control (R53) fully counter clockwise and the THRESH control fully clockwise. Set the OUTPUT control to about ten o'clock. These are the minimum settings. You should hear undistorted, noise-free audio. Both LEDs (D2 and D3) should be green. If there is distortion or noise, you need to go back and check your wiring and component polarities. If everything sounds good and you have green LEDs, then everything should be working fine. Note: with no input signal the LEDs may drift slightly and not track the THRESH control.

Once everything is working, slowly rotate the THRESH control. At some point around mid-rotation, the LEDs should start to indicate red. This means compression is starting to occur. Rotate the RATIO control clockwise. You should hear a decrease in volume as the compressor squashes the signal. At full counterclockwise rotation there might be some distortion. This is to be expected.

Using the compressor

The main use for a compressor is to keep levels from getting out of control while recording vocals and acoustic instruments. This takes a little experimentation. For a vocalist I usually start out around a 4-to-1 compression ratio with the THRESH set so the LED indicates red when the singers reach their nominal level. This way if they hit a note 20 dB higher than nominal (which would definitely clip most tape decks) the signal out of the compressor only increases by about 5 dB.

The Stereo Compressor can increase the apparent sustain of a sound. By using a large amount of compression and restoring the level with the OUTPUT control, the compressor will initially reduce the output signal by a large amount. As the input signal level decreases, the amount of compression will decrease and the output level will

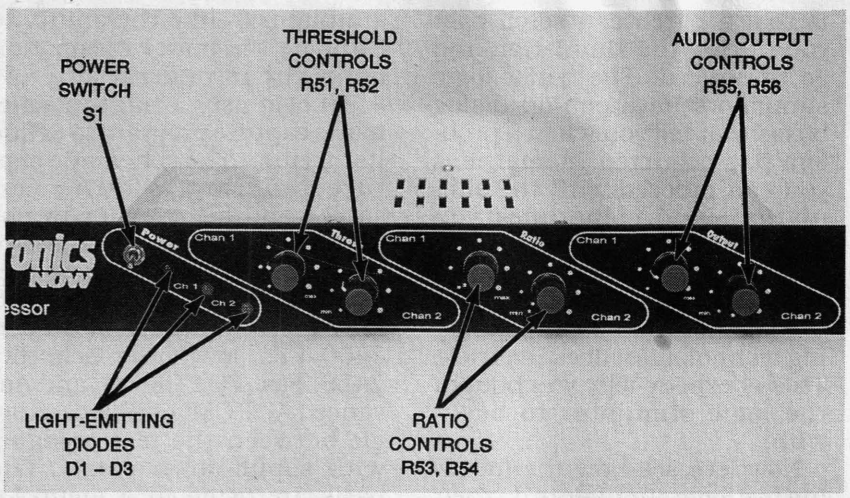

FRONT PANEL view of the Stereo Compressor. Since the unit can be used in the recording studio, channel reference is made to 1 and 2 instead of LEFT and RIGHT, respectively.

remain relatively constant. The Beatles used this on the final piano chord in A Day In The Life to make the sound linger on.

To use the compressor as a limiter while recording, set the RATIO to about 20 to 1 and set the THRESH control so that the LEDs momentarily change from green to red on peak signals. This will preserve as much dynamic range as possible.

When the Stereo Compressor is connected to a hi-fi VCR for late night viewing, set the RATIO control as high as possible without distorting and set the THRESH control to change the LED's color during quiet spoken passages. This will allow you to preserve the fidelity and stereo spread of the movie sound track, hear all the dialog, but not get blown out of your seat when the F-114 does a strafing run in your living room. The above settings are intended to be starting points, so feel free to experiment.

Using the sidechain jacks

Along with regaining control of your hi-fi VCR, there are all sorts of useful functions available via the side chain jacks. By patching an audio processor in the sidechain jacks, all sorts of cool thing are possible. One of the most useful is creating a *de-esser*. This is a device used to remove sibilance from vocals. Sibilance is that nasty Shhhh sound that occurs when S words are spoken or sung, because of the way S sounds are formed in the human vocal track.

When we form an S sound, air passes between the teeth and tongue forming a burst of white noise and a short blast of air. If the speaker or vocalist is close to the microphone, this is picked up as a brief overload and noise burst. This burst of sound mostly contains high frequencies. By setting an equalizer to boost high frequencies and patching it into the side chain, the compressor will drastically compress the signal when the high frequencies are present, but act normally when they are not.

You cannot eliminate sibilance, but it can be minimized with a de-esser. Any equalizer will work. The best way to figure out what frequencies to boost is to listen to the audio through the equalizer. Start boosting until you have noticeably increased the sibilance. Anything above 3 kHz usually works; you may have to experiment. A similar problem, although at the other end of the audio spectrum, relates to P and B thump sounds. These can be minimized the same way by boosting the offending bass frequencies (less than 300 Hz) via the sidechain.

Another abuse of a compressor is to totally squash an individual instrument signal, then restore its level. This is done with vocals, snare drums, kick drums, etc. U2 does this on a lot of their recordings. By squashing instruments that have a percussive quality (such as drums or slap bass) the amount of percussive attack is increased. This occurs because the compressor does not respond instantly. The initial attack transient portion of the signal gets through the compressor unaffected while the remainder of the signal is compressed normally. The end result is overall increase in the percussive quality of the processed sound.

The Stereo Compressor can also be used as a *ducker*. A ducker is a device that reduces one signal's level based on a different signal. This effect gets used a lot on radio commercials. In this case, a different audio signal is fed into the side chain such as an announcer's voice. When the announcer speaks, the output of the compressor is reduced. This is useful for keeping background music at maximum volume, but letting the announcer's voice cut through the background music by reducing the music level when the announcer speaks. Listen closely to any radio commercial and you will notice this effect. Duckers are also great for DJs or a presentation with background music.

This ducker effect is also used in the studio to allow one instrument to cut through on a mix. If you want a particular instrument to be more noticeable, such as a snare drum, send the snare signal into the sidechain and have the rest of the mix feeding the compressor normally. When ever the snare drum plays, it will reduce the level of the main mix, increasing the presence of the snare drum without increasing its level. Just by adding a few jacks, we have increased the power of an already useful tool.

The Stereo Compressor is a state-of-the-art audio processor. It can be used to upgrade your home recordings, as an addition to a professional recording studio, or it can just allow you to enjoy late-night movies without riding the gain. Enjoy! Ω

UHF SWR Indicator

- - 1296, anyone?

W. E. Parker W8DMR
2738 Floribunda Dr.
Columbus OH 43209

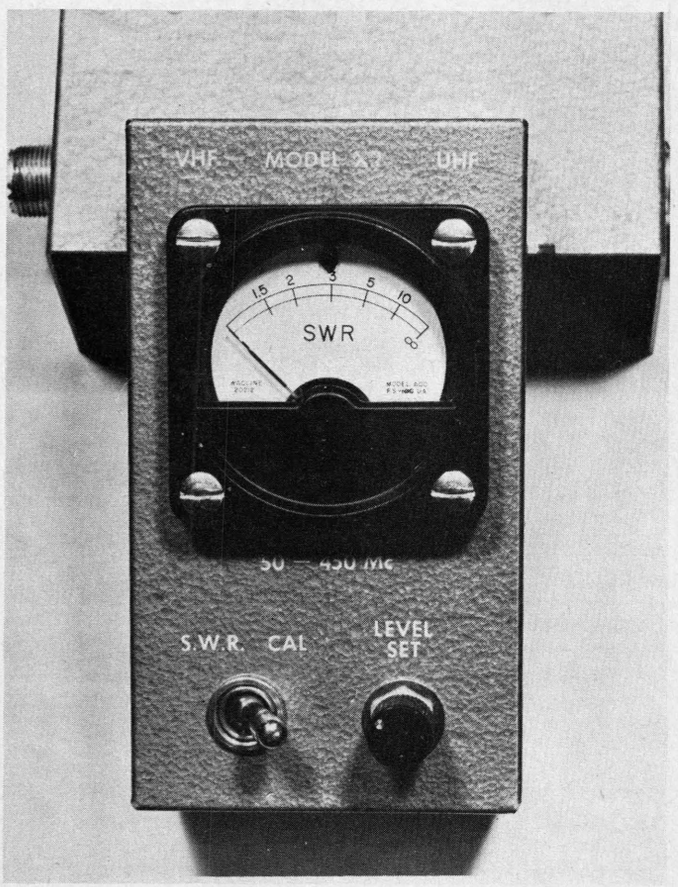

The line may be left connected in the transmission line, and the meter box conveniently placed on top of the transmitter.

There are many inexpensive standing wave ratio indicators that are listed as good up to two meters and do function well. At frequencies above approximately 150 megahertz the results leave something to be desired.

There are several valid reasons why the swr indicators are inadequate. In order to have good sensitivity at the lower frequencies (80 meters), the coupling loops used for forward and reflected wave sampling are usually six inches long, and are close-coupled to the center conductor of the transmission line. If the sampling loops are shortened and loosely coupled, then the sensitivity for the lower frequencies is greatly reduced.

Another reason for poor operation is that the coupling loops required for low frequency operation represent almost a quarter wave at the ¾ meter band (≈500 MHz). Distributed capacity between the long coupling loops and the inner coaxial conductor is excessive.

The diode rectifier characteristics become more important at the higher frequencies. The position of the pickup loops with regard to spacing, direction and concentricity must be very carefully aligned if their electrical characteristics are to be as similar as possible. Once aligned or positioned, the loops must remain rigidly affixed if a level of confidence in the indicator is to remain.

If the coupling loop is to be a small percentage of a wavelength (1/20 or about 5 percent), a length of one inch is about the maximum to be considered. If the indicator is to be used with low power transmitters (½ to 2 Watts), the loop should approach the one inch length. For high power transmitters, the loop may be as short as 1/8 of an inch. This is that portion of the loop that is parallel to the coaxial center conductor.

The coupling loops form a circuit with a resistor such that the mutual coupling is positive (+) in one case, and negative (-) in the other. The same effect could be obtained if a single loop was used for sampling, then rotated 180 degrees, and then sampled. Inspection of the equations that follow will show this is taken into account.

That portion of the loop parallel to the center conductor and the resistor form a third component, the distributive capacity element C. See Fig. 1.

The output rf voltage e_o is made up of e_r and e_m. A voltage divider is formed by distributive element C and R.

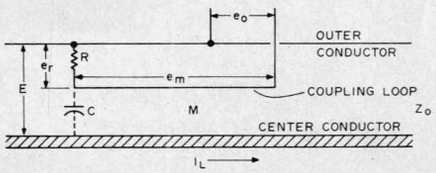

Fig. 1.

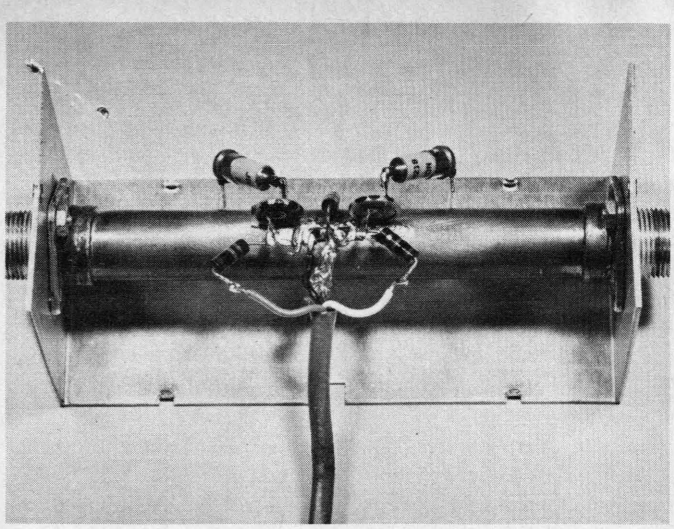

The ½ inch copper water pipe transmission line mounted in a minibox with components attached.

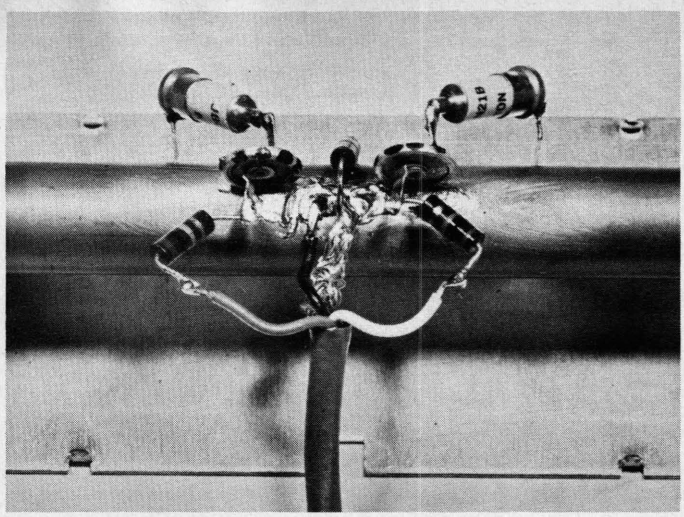

The edges of the button bypass capacitors have been soldered directly to the line. The 39 Ohm resistor is in the middle. A heat sink should be used when soldering directly on the diodes.

Then,

$$e_r = \left[\frac{R}{R + X_c}\right] E$$

and if R is much less than X_c,

$$e_r = \frac{RE}{X_c}$$

and since jwC equals $1/W_c$,

$$e_r = REjwC$$

$$e_m = I \left[jw\ (\pm M)\right]$$

by induction.

The sum of e_r and e_m is (factoring out jw)

$$e_o = jw\ (\ CRE \pm MI\ )$$

The directivity of the indicator, its ability to discriminate between the forward and reflected wave components, depends upon the relationship $CR = M/Z_o$, where Z_o is line impedance.

Substituting for CR,

$$e_o =$$

$$jw\ (\ E\frac{M}{Z_o} \pm MI\ ) =$$

$$jwM\ (\frac{E}{Z_o} \pm I\ )$$

Another relationship must be established before again substituting in the rf output voltage equation for e_o. It is important to note capital letter E is used to designate the line voltage.

The voltage E at *any* point on a transmission line is the sum of the forward and reflected voltages, or

$$E = e_f + e_r$$

It should be remembered that e_r during the next few equations represents the reflected voltage; it should not be confused with e_r, the voltage across resistor R.

Then,

$$I = \frac{e_f}{Z_o} - \frac{e_r}{Z_o}$$

The minus sign is because the reflected wave travels in the opposite direction.

$$I = I_f + I_r$$

where

$$I_r = -\ \frac{e_r}{Z_o}$$

There are two cases to consider: (a) when the resistor is toward the load; and (b) when the resistor is toward the source. So, substituting for E and I in the e_o equation for each case,

$$e_o =$$

$$jwM\ \left(\frac{e_f + e_r}{Z_o} + \frac{e_f - e_r}{Z_o}\right) =$$

$$\frac{jwM}{Z_o}\ (\ 2e_f)$$

$$e_o =$$

$$jwM\ \left(\frac{e_f + e_r}{Z_o} - \frac{e_f - e_r}{Z_o}\right) =$$

$$\frac{jwM}{Z_o}\ (\ 2\ e_r\ )$$

The equations show that the rf voltage from the loop before rectification is directional and proportional to the voltage in the transmission line (due to the forward and reflected wave respectively). Fig. 2 shows that even though E_s is zero, E_r and E_f are still present.

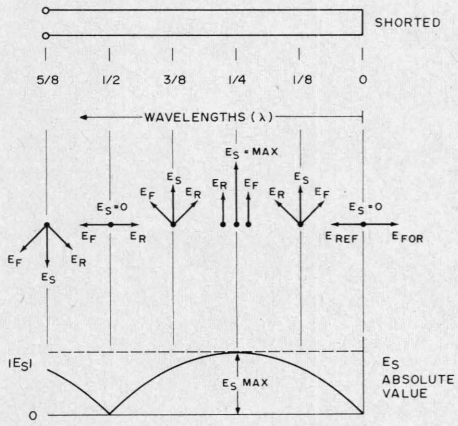

Fig. 2. Diagram of voltage standing waves on transmission line.

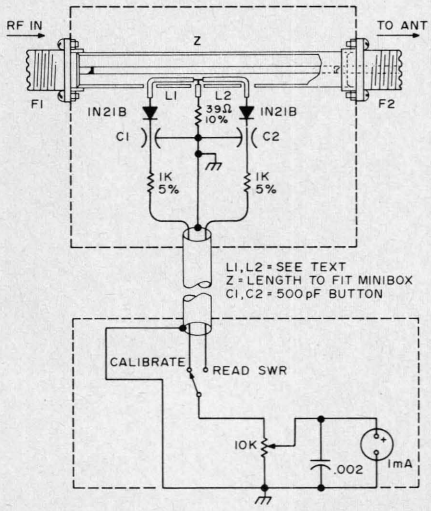

Fig. 3. UHF swr indicator.

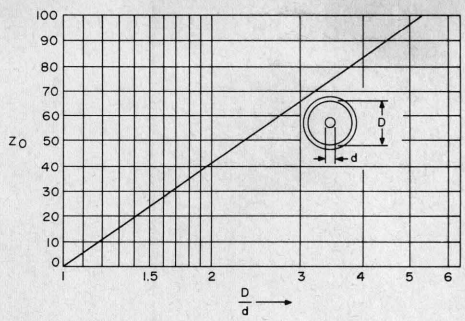

Fig. 4. Ratio of diameters to line impedance.

The frequency limits of the indicator are exceeded when resistor R is not very much lower than distributive element C, and when mutual inductance M is not nearly purely reactive.

Construction Details

A length of copper water pipe is used for the wave sampling section of the transmission line. The use of tubing helps to maintain a constant line impedance, keep the inner field distortion to a minimum, and radiation leakage down. For the center conductor, a #7 or a #3 AWG copper wire will provide a line impedance of 75 or 50 Ohms, respectively. Thin wall model builder's brass tubing of equivalent o.d. was used in constructing the indicator in the article. See Figs. 3 and 4.

To accommodate the sampling loop, drill three 1/8 inch diameter holes ¾ of an inch apart in the copper tubing. Form the insulated sampling loop, and insert the leads through the three holes. Single conductor, tinned, #22 AWG, with thin wall insulated sleeving added, maintains its shape better than stranded wire for the sampling loop. With 3/8 of an inch lead protruding out of each hole, temporarily bend each load so as to make the loop captive. This will help prevent the loop from slipping out of position during the fastening of the end fittings.

Solder the end of the conductor selected for the center lead to a mica-filled SO-239 coaxial fitting. Other types of fittings such as the N or the BNC may be used, but different mechanical arrangements will be required.

The other SO-239 fitting requires modification if no other holes are to be drilled in the outer copper tubing. The modification consists of removing the center pin of the connector. Depending upon the brand and vintage of the connector, some pins are removable by a simple "C" ring clip. Others have a rolled-in ridge for fastening, etc. After the pin has been removed intact, use a drill to establish clearance so that the pin can be freely inserted from the rear side of the connector.

Temporarily slide the copper tubing and loop subassembly over the center conductor with the fitting previously connected to one end. Determine through inspection the proper length the center conductor should be to permit the recently removed center pin to slide into the fitting with the slightly enlarged hole without protruding. The fitting must also butt against the end of the outer copper line. After the proper length has been determined, solder the pin to the center conductor.

Make two rings about 3/8 of an inch long by cutting the ends off a standard copper elbow or coupler section. With all burrs removed, the rings, line, and end fittings are ready for soldering. A 250 Watt gun or iron will speed the assembly.

If the assembly is to fit inside a ready-made minibox, the box selected and the length of the line should be compatible. The box will help keep the sampling loop from being disturbed once positioned. A ¾ inch hole in each end of the box is required, with one hole slightly elongated, so that when the box ends are sprung back slightly, the line assembly may be inserted. The assembly of the rest of the components is straightforward.

To adjust the loops, the line should be inserted into a transmission line, first in one direction and then the other, until the two sets of readings are almost identical (except reversed). Once obtained, place a drop of quick-drying model cement at each of the sampling loop exit leads, without disturbing their placement. Fig. 5 is a typical meter scale.

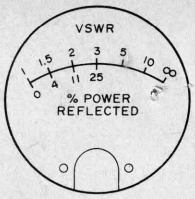

Fig. 5. Typical vswr meter scale.

If the 1N21Bs and resistors have been matched even with the humble ohmmeter, and the parts layout is reasonably symmetrical, little effort should be required to position the pickup loops.

The line and meter may be mounted together in a larger single box if desired. It may also be desirable to use a set of connectors in the interconnecting cable to insert an extension cable when needed to provide remote readings during backyard antenna matching sessions.

The directivity of this indicator, and its ability to discriminate between forward and reflected wave components from 50 MHz to 500 MHz (and maybe even higher), is excellent. The use of type N fittings is recommended for frequencies above 500 megahertz. ■

Manufactured & Guaranteed by
MOR-GAIN
2200T South 4th Street
Leavenworth, Kansas 66048
(913) 682-3142

MOR-GAIN

BankAmericard and Mastercharge available

Fully Air Tested — Thousands Already in Use

EXCLUSIVE 66 FOOT, 75 THRU 10 METER DIPOLES

#16 40% Copper Weld wire annealed to it handles like soft Copper wire — Rated for better than full legal power AM/CW or SSB-Coaxial or Balanced 50 to 75 ohm feedline — VSWR under 1.5 to 1 at most heights — Stainless Steel hardware — Drop Proof Insulators — Terrific Performance - No coils or traps to break down or change under weather conditions — Completely Assembled ready to put up — Guaranteed 1 year — ONE DESIGN DOES IT ALL.

NOTES
1. Models prefaced ' ** ' will be available 1/77.
2. All models above are furnished with crimp/solder lugs.
3. All models can be furnished with a SO-239 female coaxial connector at additional cost. The SO-239 mates with the standard PL-259 male coaxial cable connector. To order this factory installed option, add the letter 'A' after the model number. Example: 40-20 HD/A.
4. 75 meter models are factory tuned to resonate at 3950 kHz. (SP) models are factory tuned to resonate at 3800 kHz. 80 meter models are factory tuned to resonate at 3650 kHz. See VSWR curves for other resonance data.

MODEL	BANDS (Meters)	PRICE	WEIGHT (Oz/Kg)	LENGTH (Ft/Mtrs)
40-20 HD	40/20	$49.50	26/.73	36/10.9
**40-10 HD	40/20/15/10	59.50	36/1.01	36/10.9
80-40 HD	80/40 + 15	57.50	41/1.15	69/21.0
75-40 HD	75/40	55.00	40/1.12	66/20.1
75-40 HD (SP)	75/40	57.50	40/1.12	66/20.1
75-20 HD	75/40/20	66.50	44/1.23	66/20.1
75-20 HD (SP)	75/40/20	66.50	44/1.23	66/20.1
75-10 HD	75/40/20/15/10	74.50	48/1.34	66/20.1
75-10 HD (SP)	75/40/20/15/10	74.50	48/1.34	66/20.1
**80-10 HD	80/40/20/15/10	76.50	50/1.40	69/21.0

NO TRAPS—NO COILS—NO STUBS—NO CAPACITORS

MOR-GAIN HD DIPOLES . . . • One half the length of conventional half-wave dipoles. • Multi-band, Multi-frequency. • Maximum efficiency — no traps, loading coils, or stubs. • Fully assembled and pre-tuned — no measuring, no cutting. • All weather rated — 1 KW AM, 2.5 KW CW or PEP SSB. • Proven performance — more than 15,000 have been delivered. • Permit use of the full capabilities of today's 5-band xcvrs. • One feedline for operation on all bands. • Lowest cost/benefit antenna on the market today. • Fast QSY — no feedline switching. • Highest performance for the Novice as well as the Extra-Class Op.

Write or phone for full information or contact your favorite dealer.

M11

Number 16 on your Feedback card

ABOVE & BEYOND

VHF and Above Operation

C. L. Houghton WB6IGP
San Diego Microwave Group
6345 Badger Lake Ave.
San Diego CA 92119

1691 GOES Converter, The Local Oscillator/Mixer

Well, last month I described the conversion of an LNA or an LNB to cover useful frequencies for 1691 in particular. This type of design does not have to be frequency specific, but the broadband nature of the converted TVRO converter amplifier lends itself to converters from 1,000 MHz to 3.5 GHz. Whatever your frequency of interest, the principal is the same. A good RF amplifier is a mixer and a local oscillator to convert the high frequency to a lower IF frequency for reception.

I have received several letters wondering where to pick up LNA amplifiers. I got mine for this test project at a local hamfest swap meet. Other locations that might show promise is to look in your local telephone directory for satellite television installers. They usually have some of the older LNA amplifiers of the 50 to 100 degree noise temperature units that have been replaced with lower noise figure units, like 20 to 25 degrees. The newer units are much hotter than the older units and are sought after by TVRO users. The units that they replaced are what we want and usually they can be had for about five dollars.

The conversion of these units is not too difficult. Remove the cover and add a two to five pF chip capacitor to the input of the amp where the previous waveguide connection resided. To the other end of this capacitor connect an input RF connector, usually a SMA or whatever your favorite RF connector is. With an Exacto™ knife, remove the frequency-determining stubs, leaving the bias and main connecting 50-ohm stripline connecting all amplifiers. If you have an LNB, add capacitance to the interstage capacitors by doubling up coupling capacitors to lower the frequency response of the IF amplifier. See Figure 1 for more detail covering these modifications.

The mixer I discussed last month was the Mini Circuits SRA-11, which has good RF performance to 2,000 MHz. The units that I tested I modified by soldering SMA connectors to the mixer pins for quick adaptation to many of the different circuits that I tried. See Figure 2 for SRA-11 connections. Other mixers could be used; I used the SRA-11 because it was available in surplus on a scrap PC board. Any other type of mixer could be used, even a home-brewed one similar to the one that I described in this column several years ago.

The main thrust of this month's column is the local oscillator. It normally would operate on 1554 MHz, using a 137-MHz IF system for weather data reception on 1691 MHz. We obtain 1554 MHz by subtracting the IF from the RF frequency to obtain 1554 MHz.

There are several methods that could be used. One idea would be to use a CATV tuner local oscillator at 1/3 or 1/2 the required frequency. By operating at 1/3 the frequency of 518 MHz, a simple tripler stage and buffer amplifier would be all that is required to be added to the synthesizer-controlled CATV local oscillator. Again, I am using the internal divide-by circuitry in the CATV tuner to input a low-frequency signal to the familiar Motorola MC-145106 synthesizer chip for

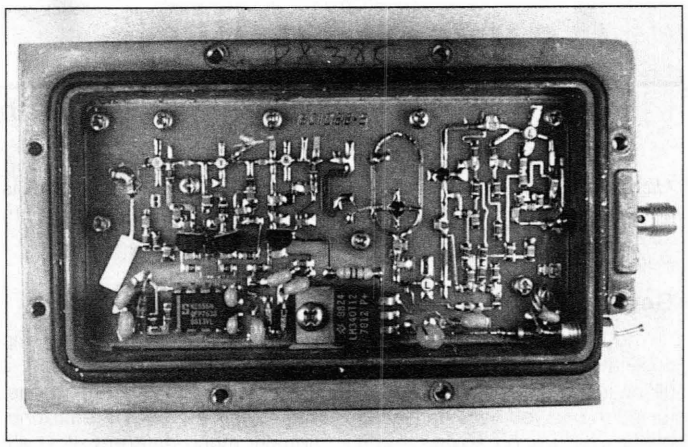

Photo A. Component side view of modified LNB converter. Far left—RF input; right—IF output with feedthrough capacitor for DC power. Mixer just right of center looks like oval racetrack, diode bottom LO input left of racetrack.

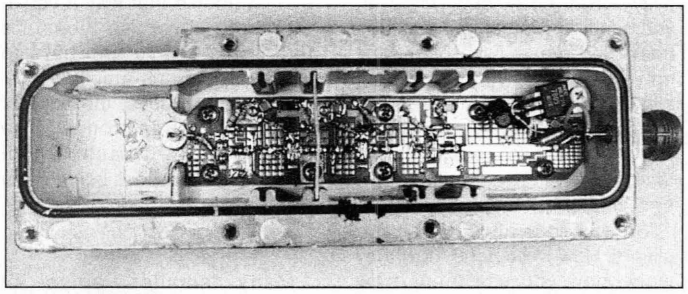

Photo B. Converted 3.7 to 4.2 GHz TVRO LNA converter. Sharp corner above SMA connector is the result of a large waveguide flange removed by bandsawing off the unnecessary metal part of the unit. Left—SMA connector RF input; right—N connector IF output.

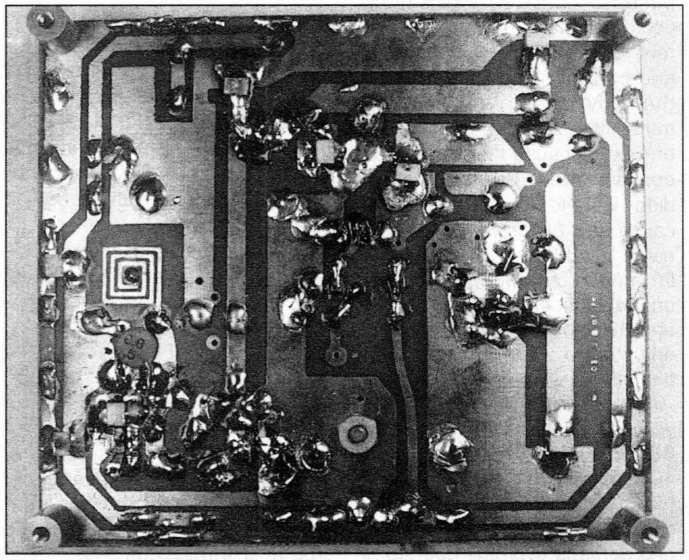

Photo C. Bottom of PC board from RSGB Handbook *for crystal oscillator and harmonic multiplier to 500 MHz range. Note PC board inductor for crystal oscillator.*

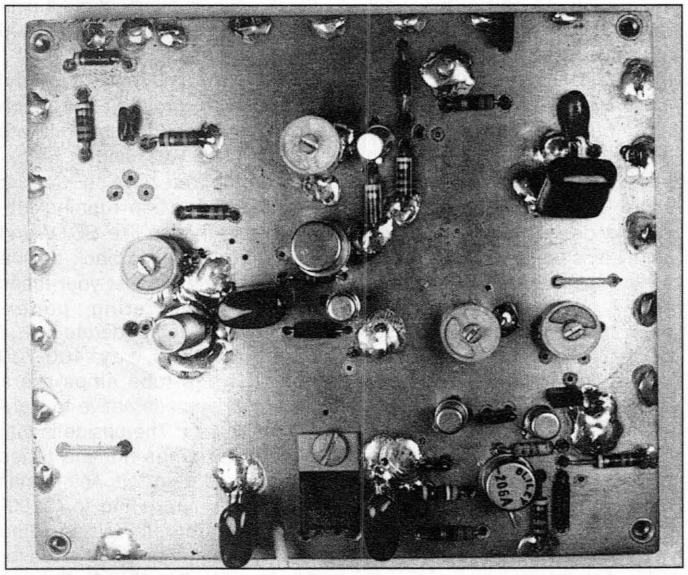

Photo D. Top view of RSGB crystal oscillator.

this type of circuit. See Figure 3 for synthesizer circuitry. Multiplier circuits can be found in many different reference books, such as the *ARRL Handbook's* VHF and UHF sections. Take a look at the designs for the 1296-MHz converter and portions of the circuitry can be adapted from them. Other good sources are the RSGB (Radio Society of Great Britain) VHF, UHF handbook.

Of course, the local oscillator can take the form of a single crystal starting out at a fraction of the required frequency and going through several multipliers until 1554 MHz is obtained. Sort of like a crystal-controlled transmitter multiplier to the operating frequency for CW operation. This local oscillator operation is quite identical.

The scheme that I would prefer, given a larger budget, is to use a fundamental frequency-controlled local oscillator that is capable of operating on 1554 MHz directly, without multiplication. This type of oscillator is a VCO (Variable Controlled Oscillator). The reason that I did not select a VCO is that most amateurs would have difficulty in obtaining these devices. They are not commonly available. I suspect this project will be attempted by a large number of experimenters and I wanted to name parts easier to obtain. The type and availability of certain dedicated components might hinder those trying to follow a cookbook adaptation of the local oscillator. Remember, I am trying to construct this converter on a shoe-string budget and still make a converter that will perform well.

With preferences aside, what is the simplest system that can be constructed and still do a reasonably good job? A synthesizer-controlled oscillator from a TV tuner with its internal divide-by circuitry coupled to the Motorola MC-145106 synthesizer chip for the local oscillator, I believe. A new idea for the mixer allows the local oscillator to operate on one-half the required frequency, eliminating the multiplier stages previously covered. The best part of the new mixer is that it's home constructed.

The home-built mixer is the key to the simplest converter, as the type of mixer I will describe does not require the local oscillator multiplier previously discussed. This mixer design uses one half of the required local oscillator frequency allowing us to use the TV tuner in it's original operation range, making it a simpler system to construct by eliminating complex components and keeping costs low.

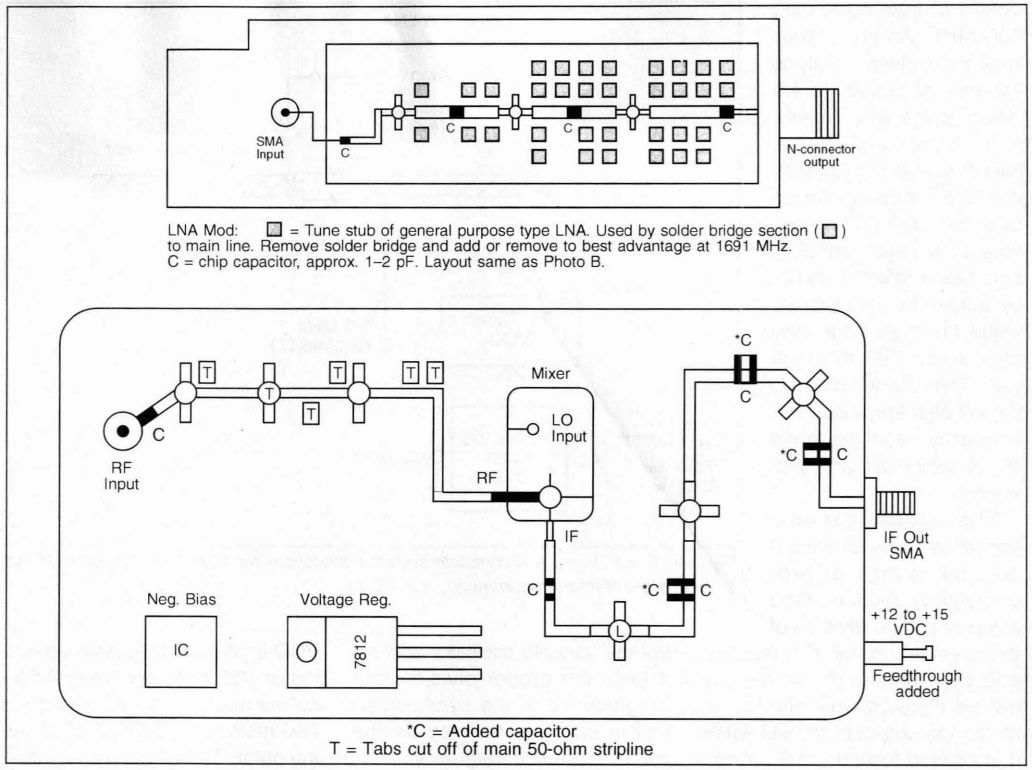

Figure 1. Modifications to LNA and LNB amplifiers.

The Technical Bits and Pieces

Our complete system would comprise a converted TVRO converter amplifier (LNA) for a home-built mixer, a synthesizer controlling a TV tuner local oscillator, and an optional IF amplifier to complete the part of the packaged converter. See Figure 4 for the package block diagram.

Looking at the TV tuner, it in itself is a complete IF converter for a set block of frequencies. CATV type tuners are made to cover

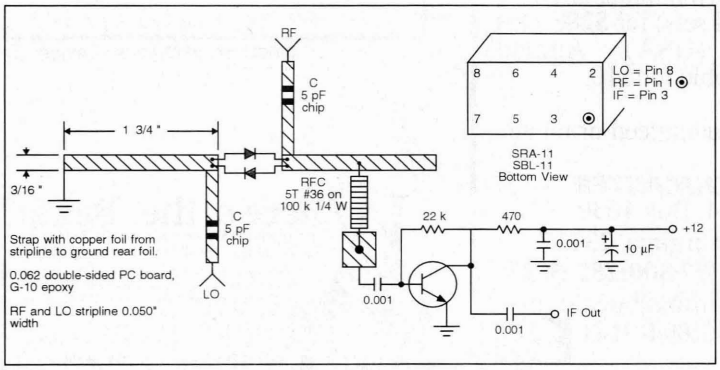

Figure 2. Mixer considerations for SRA-11 and home-built mixer circuits. Note that the home-constructed mixer requires half local oscillator frequency injection (777 MHz) as opposed to 1554 MHz.

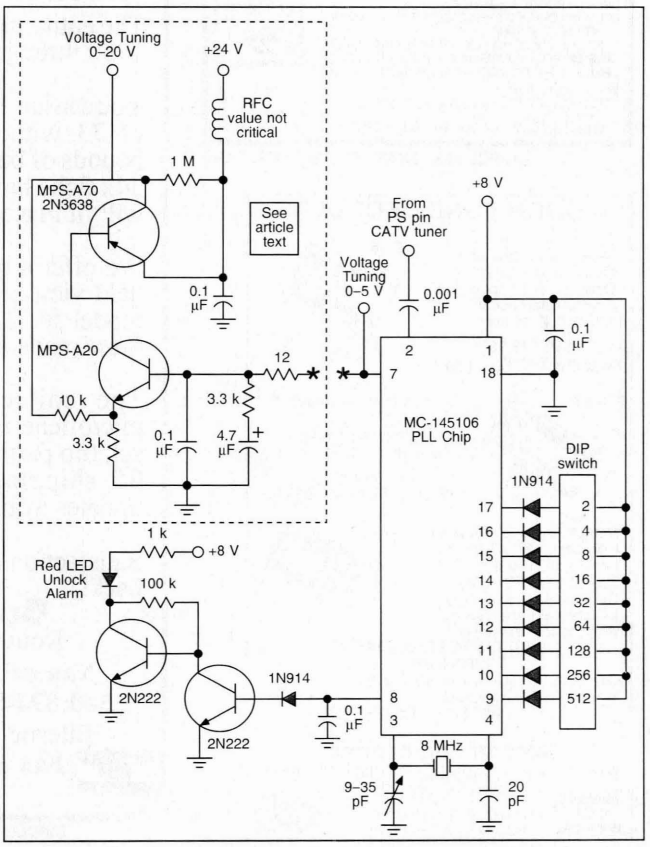

Figure 3. MC-145106 synthesizer schematic details.

ranges of from 50 to over 500 MHz. As such, they lend themselves readily to this type of project. In addition to the amp, mixer, and bandpass filters (which we do not require), the CATV tuners have a local oscillator that is variable by voltage control. It also has a internal divide-by frequency chip that divides the high frequency by a fixed 256 division rate. This divider reduces the LO high frequency to a frequency within the range of the Motorola synthesizer chip.

The synthesizer chip contains two different counter strings or programmable dividers. One string is for the division of the crystal-controlled reference and the other is to set the required division rate needed to match the output of the LO when it is phased locked to the crystal reference frequency. Both these outputs are connected internally to a phase comparitor which produces an output voltage to control the variable oscillator and set it (with the proper division rate programmed in the synthesizer) to the same frequency as the crystal reference frequency.

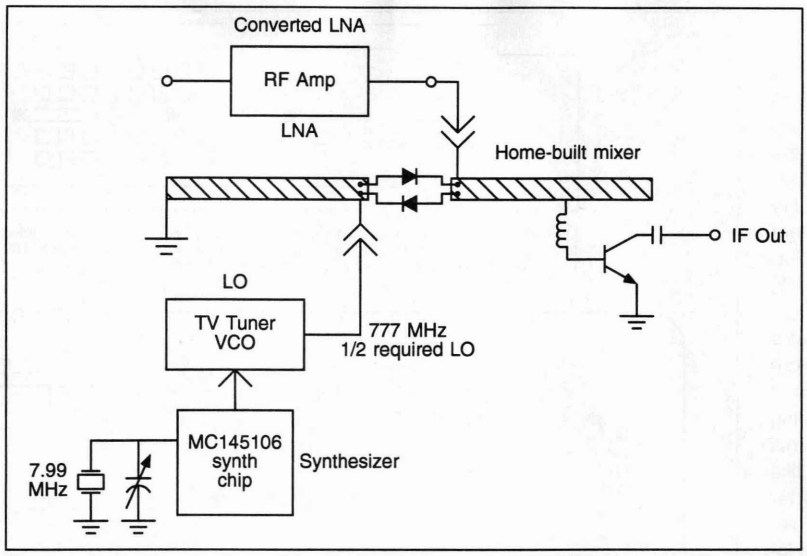

Figure 4. Block Diagram of complete system connections for 1691 MHz converter. Filters for isolation and out of frequency immunity not shown.

In our case, the crystal is 8 MHz exactly and is being divided by 1024, the reference frequency being 7.8125 kHz. Now when the VCO in the CATV tuner is operating on 778 MHz, the fixed divide-by internal to the CATV tuner is 256 making 3.0390625 MHz being output to the Motorola synthesizer chip's divide-by circuitry. By setting the MC-145106 oscillator divide-by rate (can be set from 2 to 511 maximum) to 389, the output of this divide-by chain is exactly 7.8125 kHz, and the synthesizer is locked up and happy.

Of course, when power is applied, nothing is further from the truth. However, when the crystal oscillator starts operating and the 7.8xxx kHz main crystal reference is input to the phase comparitor, the main CATV oscillator is set to some frequency and is being divided down by, first, 256 in the converter, and 389 in the synthesizer chip. At first, the frequency is quite in error and the phase comparitor outputs a correction voltage to bring the variable oscillator in check. It continues to doso either raising or lowering the voltage to make the two frequencies the same. Hopefully, within the voltage pull-in range of the phase comparitor.

I have included in previous articles on the 1296 MHz converter how to lower the tuning voltage sensitivity to allow direct connection to the MC-145106. Also in-

ULTIMATE MODIFICATION BIBLE VOL. IV
NEW AND MORE COMPLETE!!!
OVER 800 MIKE WIRING CODES FOR CB AND HAM RADIOS.
OVER 400 CB POWER/MODULATION BOOST INSTRUCTIONS.
OVER 200 MOD. FOR CB PLL'S.
OVER 175 MOD. FOR HAM RADIOS.
OVER 50 COMPLETE SYNTHESIZED CRYSTAL CHARTS WITH INSTRUCTIONS.
OVER 25 SCANNER MOD. AND TEN METER RADIO MOD.
OVER 20 PRECALCULATED MOD. CRYSTAL CHARTS.
LINER SCHEMATIC'S AND ANT./COAX db GAIN/LOSS CHARTS.
KDC SOUND
17294 FM 3083
Conroe, TX 77302
Orders Only: 1-800-256-9895
All Other Calls: 409-231-3753
$29.95
MONEY ORDER, COD
MC/DISC./VISA OR CK
CIRCLE 151 ON READER SERVICE CARD

TOUCH TONE DECODERS
Speaker muting
Repeater control, etc.
Decodes 16 digits
Detects 4 digit sequence
Crystal referenced
12V D.C. @ 20ma
TD-16
KIT: $49.95*
WIRED & TESTED: $59.95*
TD-16A
Adds 4 latched outputs to TD16
Directly drives 4 relays
Separate on & off codes
KIT: $19.95*
WIRED & TESTED: $29.95*
TD-1M
Detects any one of 16 digits
Compact: 1 1/8" x 3/4" x 5/16"
Fits inside HTs, etc.
5 to 12V. DC. @ 10ma
Generates alert signal or switches external device when tone is detected
WIRED & TESTED: $34.95*
TD-16BP
Connects to TD-16 to create a basic repeater (non-simplex) auto patch:
WIRED & TESTED: $59.95*
Norcon Engineering
P.O. BOX 4042, WILMINGTON, NC 28406
910-791-7600
NC residents add 6% sales tax
*Add $2.50 S & H per order

EVERY ISSUE OF
73 Amateur Radio Today on Microfiche!
The entire run of 73 from October 1960 through last year is available.
You can have access to the treasures of 73 without several hundred pounds of bulky back issues. Our 24x fiche have 98 pages each and will fit in a card file on your desk.
We offer a battery operated hand held viewer for $75, and a desk model for $260. Libraries have these readers.
The collection of over 600 microfiche, is available as an entire set, (no partial sets) for $285 plus $5 shipping (USA). Annual updates available for $10.
Satisfaction guaranteed or money back!
BUCKMASTER
Route 4, Box 1630
Mineral, Virginia 23117
540:894-5777·800:282-5628
Internet: info@buck.com
Fax 540:894-9141
CIRCLE 168 ON READER SERVICE CARD

DIRECTION FINDERS
VECTOR-FINDER
HAND-HELD PHASE SENSE ANTENNAS FOR VHF DIRECTION FINDING. USES ANY FM RCVR. ARMS FOLD FOR STORAGE.
TYPE VF-142 144-220 MHZ $139.95
TYPE VF-142Q LEFT-RIGHT LEDS & AUDIO, 144-220 MHZ $239.95
TYPE VF-142QM SAME AS Q MODEL EXCEPT FREQ.144-500 MHZ $289.95
TYPE VF-121Q SAME AS VF-142Q PLUS 121.5 MHZ ELT FREQ $379.95
CALL ABOUT HF DF, ATTENUATORS
ADD $4.50 S/H
CA ADD TAX
RADIO ENGINEERS
7969 ENGINEER RD, #102
SAN DIEGO, CA 92111
619-565-1319 FAX 619-571-5909
CIRCLE 58 ON READER SERVICE CARD

Where's the Beam?
Unobtrusive DX Gain Antennas for 80 thru 10
• Easily hidden • Install Fast • Fixed or Portable •
There's a 20 meter antenna with real DX Punch hidden in this picture. You can't see it, and your neighbors can't either. But it works DX barefoot anyway. How about a low profile 80/40/30 tri-bander? Or a 2 element monobander for the attic? All easily fit the pocketbook--Priced $29 to $99.
Work DX without telling the neighbors
Infopack $1
Box 50062-R, Provo, UT 84605
AntennasWest
(801) 373-8425
CIRCLE 332 ON READER SERVICE CARD

cluded is an interface if you want to increase the voltage tuning range from zero to five volts, to zero to 20 volts by adding the two-transistor circuit. Its a flavor choice item on your part.

Oh, I forgot to tell you—we want to operate on 1554 MHz and while I was working with perfect numbers like 8 MHz and such, I left out this detail. Adjust the crystal lower in frequency by about one kilohertz to permit half LO, or 777 MHz, to be realized. Actual reference frequency required is 7.802458226 kHz which is obtained by dividing 777 MHz by 256 (CATV Tuner) and dividing the quotient by 389 (programmed in the MC 145106 chip). If you set the 8-MHz crystal to 7.98717224 MHz this will all work out. Actually the 8-MHz crystal used as system clock is set 1.3 kHz low in frequency by padding a junk 8-MHz crystal. If you want to be a purist, order a crystal for the exact frequency.

The frequency stability of the system will be just as stable as the 8-MHz crystal is. If you choose to use a higher stability source, it will work as well. It can be connected to pin 3 and ground of the MC-145106 synthesizer chip.

Mixer Construction

As I said, the mixer requires half LO frequency, making this mixer a little unusual but practical, as it affords a simple construction without adjustment. The mixer first surfaced in simple converters for the 2304 MHz amateur band and some TV receiving applications quite a few years ago. It was part of the coffee-can-type of converters popular back then. I have noticed reference to them in *Ham Radio Magazine* in August 1978 and in the 4th edition of *The RSGB VHF/UHF Handbook*. The real source is a mystery to me.

The mixer is constructed on .062 inch double-sided PC board material with the rear of the board serving as a grounded-foil ground plane surface. The top surface is where the pattern of the mixer is etched or cut out with an Exacto™ knife—dimensions are not critical. The main stripline is 3/16-inch wide and 3 1/2-inch long, broken in the middle for connection to the two diodes. The local oscillator connection is made to the grounded section of the transmission line at the diode connection point. The other stripline is open at its end and the connection is made to the diodes at that point. The IF feed is taken off with a small 5 turn RFC (5 turns #36 enameled wire on a 1/4-watt, 100k resistor form) midpoint along the side of the strip line. The large pad that the other end of the RFC attaches to form a capacitance to ground, shorting out at 1691 MHz, and is a higher impedance at 137 MHz. See Figure 5 for mixer construction details.

"Oh, I forgot to tell you— we want to operate on 1554 MHz and while I was working with perfect numbers like 8 MHz and such, I left out this detail."

Don't forget to have one end of the mixer stripline grounded at one end with as short as possible a piece of copper strap to ground. It forms a shorted transmission line to ground for the local oscillator injection port. The other side of the diodes are connected to the IF output ports of the mixer.

A single-stage IF amplifier finishes out the mixer circuitry. This stage was originally constructed with a type MRF-901 as was the original circuit where I got some of the ideas for this simple converter. Other NPN-type high frequency transistors could be used in this application; it's not fussy. I tried an Avantek AT-85067 NPN-type and it worked as well.

Well that's it for this month. As always, I will be glad to answer amateur-related questions concerning this and other projects. Please send a SASE for prompt response. 73 Chuck WB6IGP.

BATTERIES

BUY DIRECT FROM US, THE MANUFACTURER!

YAESU

FNB-2	10.8v @	600 MAH
FNB-4	12v @	750 MAH
FNB-4A	12v @	1000 MAH
* FNB-10(S)	7.2v @	1200 MAH
FNB-12(S)	12v @	600 MAH
FNB-17	7.2V @	600 MAH
FNB-25	7.2v @	600 MAH
FNB-26	7.2v @	1200 MAH
**FNB-26(S)	7.2v @	1500 MAH
FNB-27	12v @	600 MAH
**FNB-27(S)	12v @	800 MAH
**1/4" longer than FNB-27		
FNB-31	4.8v @	600 MAH
FNB-33(S)	4.8v @	1500 MAH
FNB-35(S)	7.2v @	600 MAH
* FNB-35(S)(S)	7.2v @	1500 MAH
FNB-38	9.6v @	600 MAH
*1 1/3" longer than FNB-38 case		

BATTERY ELIMINATORS AVAILABLE

SPECIAL

FOR THE MONTH OF NOVEMBER

10% OFF ON ALL KENWOOD

Replacement Batteries

LOOK FOR DECEMBER'S SPECIAL OF THE MONTH

MONTHLY DISCOUNTS APPLICABLE TO END-USERS ONLY

Powerpac+®

6 V for Camcorders & 12 V for 2-way

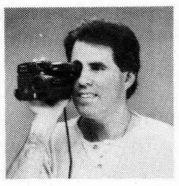

Prices and specifications subject to change without notice.

NYS residents add 8 1/2% sales tax. Add $4.00 for postage and handling

W & W ASSOCIATES

800 South Broadway, Hicksville, NY 11801

WORLD WIDE DISTRIBUTORSHIPS AVAILABLE. PLEASE INQUIRE.

MADE IN THE U.S.A.

SEND FOR FREE CATALOG AND PRICE LIST

In U.S.A. and Canada Call Toll Free:(800) 221-0732 • In NY State Call:(516) 942-0011 • Fax:(516) 942-1944

CIRCLE 191 ON READER SERVICE CARD

ABOVE & BEYOND

VHF and Above Operation

C. L. Houghton WB6IGP
San Diego Microwave Group
6345 Badger Lake Ave.
San Diego CA 92119

10 GHz Operation & Loran: A Poor Man's Grid Square Location System

This month will be a very busy one with both the first weekend of the ARRL 10 GHz contest and the ARRL convention taking place in San Diego. Both events should produce a flurry of activity, consuming lots of time, setting up for either event. I am looking forward to the convention because of all the activities and eyeball QSOs. In addition to getting ready for the convention, we are trying to give our microwave equipment a good shakedown test starting in early May to ensure proper contest-time operation. New items that have been added are given a real stress test for field operations to make sure they won't fail in portable operations.

It seems that most of the time I do not give my equipment the time needed to put it into top shape due to the many different constraints put upon the time I have available for hobby activities. I don't want to put a strain on family activities and the hobby must remain as just that, a hobby. I recommend starting much earlier on equipment checks, leaving lots of time for family activities. I've just got to start earlier next year (as I always say).

This month I will put into practice some of the methods and practices that our San Diego Microwave Group uses to facilitate microwave contacts. Some of the devices we bring into play are very simple and inexpensive, while other items can be a little more complex and costly. In this light I would like to start with a few simple devices that can be put into operation for little cost; then I will cover a surplus Loran receiver system that is used for position control.

10 GHz Contest Preparations

A little background information on our systems might be in order first. In our operations, both high power (10 watts) and low power systems (50 to 100 mW) are used for SSB operations and both produce very good results. While the low power systems are not as "loud" as the high power systems, they are quite readable and log just as many contacts as high power systems. First Rule: High power is nice, but not necessary if conditions are reasonable. First choice: Don't go for power, but improve your receiver noise figure.

MMICs for Receiver Preamps

A good investment in your SSB system would be to make performance improvements in the receiver system, particularly the preamplifier gain and noise figure. If your system operates in the 10 dB or so noise figure range, a tremendous improvement can be made with lower noise figures. If you lower your noise figure from 10 dB to something near 3 dB you will be surprised at the overall performance improvements. It's like having the transmitter at the other end of the path double or quadruple its power output.

What kind of amplifier should I build to attain a low noise figure? Well, there are many devices that are suitable, all of them having GaAsFET-type construction. The basic types are HEMPT-type FETs, which require a stripline design for proper operation at the design frequency of interest. The stripline PC board must be designed to match the device to the specific frequency of interest. Another type to use is the MMIC. This MMIC is a Microwave Module Integrated Circuit and all circuit parameters are matched to 50 ohms on both the input and output of the device. Specific design requirements are not necessary, as in the GaAsFET-type amplifier, making amplifier design quite easy. Most normal MMICs that I am familiar with are good for something up to 2 to 3 GHz at best. While there are MMICs that operate at much higher frequencies, their prices are prohibitive.

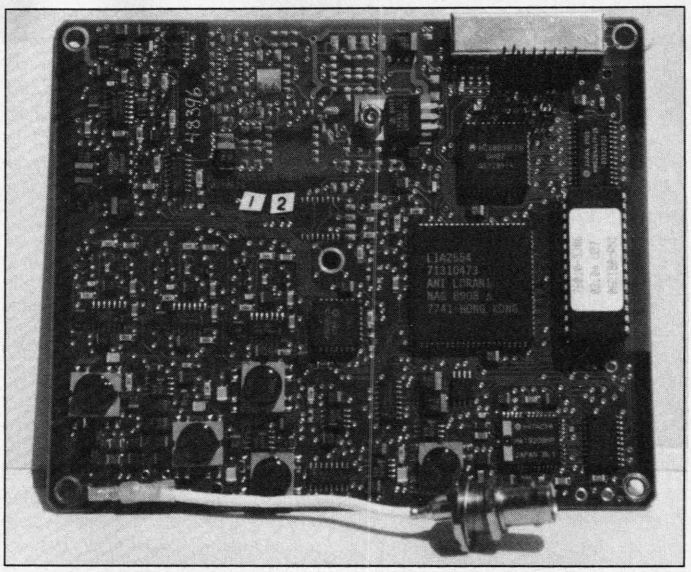

Photo A. LORAN receiver PC board with BNC connector.

However, all that has changed with Hewlett Packard's new MMIC, the MGA-86576 MMIC. The frequency response of this device is good from a low frequency limit of 1 GHz to just over 10 GHz. This device sports about 20 dB of gain over the 1-to-10-GHz range, and noise figures under 3 dB. Now the best part: These devices cost about $8 each in single quantity from Hewlett Packard Distributors. Kerry N6IZW made a circuit test using one of these devices using a 10 GHz stripline PC board that was originally made for a Mgf-1402 GaAsFET, and cut off the tuning tabs leaving only the bias lines and 50 ohm stripline. Usable gain as measured at 10 GHz was 13 dB, and the noise figure was not measured but observed very near the 3 dB estimated. See Figure 1, the MMIC circuit diagram.

I plan to do more testing on this device and have ordered several more devices to experiment with. I will report on further tests as they develop. From the first test runs, this Motorola MMIC device has us very impressed due to the very inexpensive nature and wide frequency band of operation. Add this device to your system and you should see quite an improvement in receiver operations.

Microwave Dish Alignment

The next simple item that can be useful is dish pointing and alignment, specifically vertical dish alignment. When you know where the proper vertical alignment is, its not a problem. However, when you need a calibration marker this is a difficult calibration. How do you construct a calibration device for this purpose? This problem can be easily solved by adding an old meter movement to your dish tripod. This meter movement can be a defective meter from surplus. Mount the meter upside down on your dish, with the center of the meter movement pointing downward. This meter will now serve as an indicator of your dish antenna—use the indicator as calibration marks to reference the vertical angle or incline your dish is now aimed at.

Basic calibration is accomplished by adjusting the meter needle to a reference point when copying a remote beacon or station. First copy a beacon whose position is known; that will give you a good horizontal compass reference. Then, rock your dish in the vertical position for best signal strength and set the meter to its reference. Now you can rock the dish in other test inclines and try for that faraway shot, knowing (without guesswork) a good position (which should be near the correct position) for your dish. This allows you to return to a calibration point without guesswork. It's basically an incline meter from a very unusual source. It doesn't even matter if the meter is any good, just that the meter movement swings free with gravity. You must remove the meter movement spring from the meter for free movement of the indicator on the meter.

The next point is distance alignment, your horizontal compass heading. In this category you need to know where you are and have some method of accurately pointing your dish antenna at the other station. Needless to say, the other station has to know where he is located. A six-figure grid square location is sufficient for this heading. Up on big rock candy mountain near the cutoff, "about 30 miles from wherever" just doesn't cut it. Trying to use locations like that would be like swatting flies blindfolded. It can be

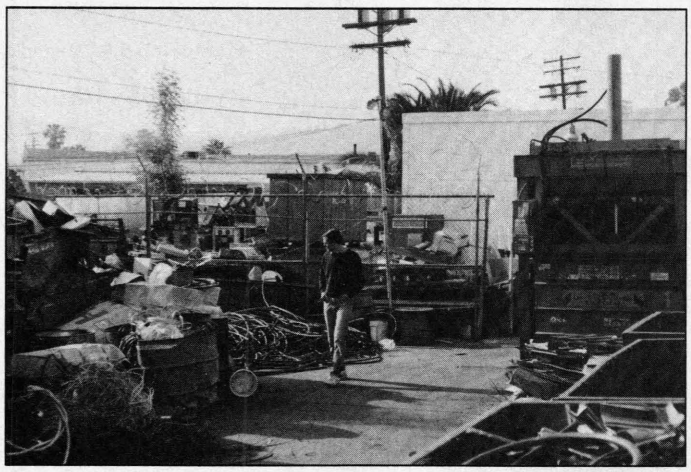

Photo B. One of our "secret" surplus yards being observed by Kerry N6IZW. Note the large CRUSHER on the right, (not a space alien or relative of Dr. Crusher of STAR TREK fame). Surplus electronic items are saved from this and other similar junkyard tools of destruction.

accomplished with maps and other references, but trying to find an unfamiliar location this way takes lots of time away from microwave operation. A big help with map use is to draw out compass directions to popular spots, giving forward and reverse compass bearings. Plan ahead! Know where the other fellow is going to operate from and determine the compass heading in advance. If you have big bucks, obtain a GPS receiver—it will give your location and tell you if you are in the end zone or eating popcorn in the first row. The cost of these devices range from $500 up, mostly *up*. An alternative to this system is LORAN. It's still a toy for me in this application, but an inexpensive toy.

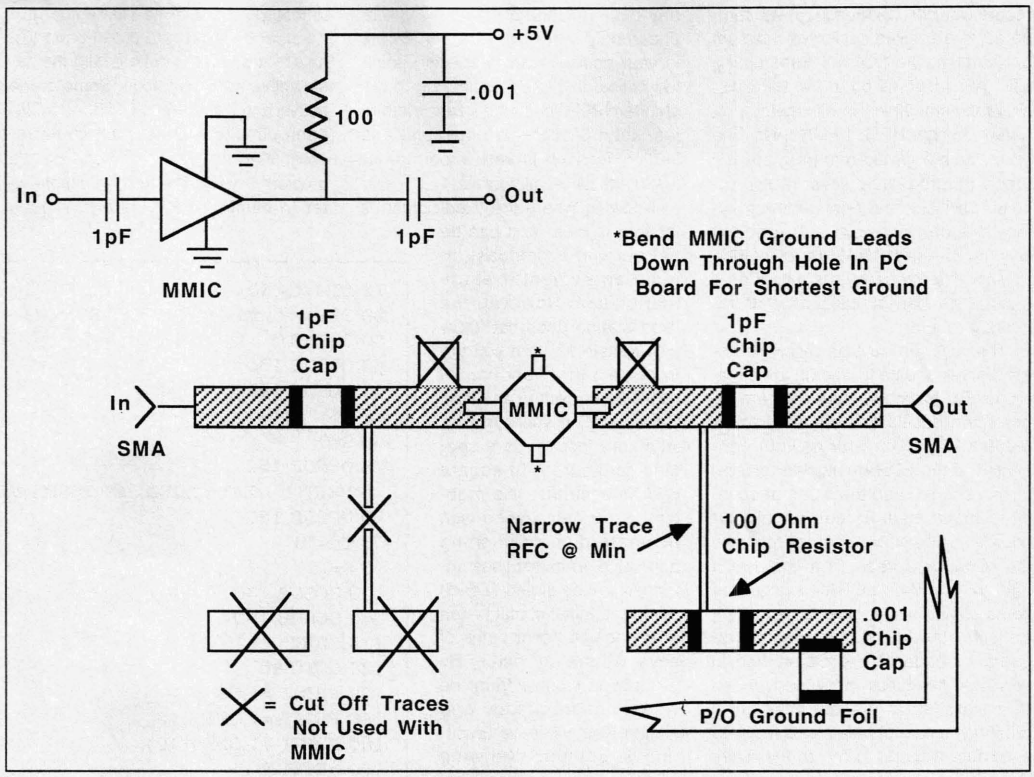

Figure 1. A modified 10 GHz amplifier board, featuring the Motorola MGA-86576 microwave MMIC. Gate bias circuit for FET is not required using MMIC. Circuit produced 20 dB gain at 1 GHz, and 13 dB gain at 10 GHz. Approximate noise figure was 3 dB.

LORAN Location System

Loran was in operation before GPS, and it can give very usable location data. It is not as accurate as GPS but it can tell position with accuracy to about a third of a mile. Its accuracy depends on how well it can receive its location transmitters and it can give results to about to about 2,000 feet or so. In actual practice, Kerry and I have observed the readout accuracy to be about 0.34 mile.

Why use Loran when GPS is available and provides much more accuracy? Price. We located a receiver in surplus and gave it a try. We became so excited by the results that we picked up the whole batch of receivers before they could be lost forever (see Photo A).

Putting the receiver into operation was not difficult. All that is required to put the board into operation is an IBM or compatible PC running BASIC, and a single com port (RS-232). A simple one-chip interface device (Maxim 232 chip) is needed to interface the Loran PC board and the RS-232 port on the computer. See Figure 2, a computer interface adaptor schematic using this Maxim chip.

As you can see from Figure 2, only the Maxim chip and a few capacitors and voltage regulators are required. Minimum connections are necessary to your RS-232 port as only the serial receive and transmit lines are required, making this adaptor easy to duplicate. When your adaptor is constructed, a simple checkout is all that is needed. I blew my adaptor up by not being careful—I had reversed the +5 and +15 volt lines. Don't you make the same error—check your work over before applying power. You can check three times, but you can only apply power wrong *once*! Repairing my wiring error and replacing the chip solved the circuit problem.

Check it out with a voltmeter. You should have about +10 volts on pin 2, and -10 volts on pin 6 of the Max-232 chip. Current draw is 250 mA at 5 volts and 100 mA at 15 volts. You will need to heat-sink the 5 volt regulator to keep it cool at this current. See Figure 2 for interface pinouts on the LORAN PC board. Only a few pins are actually used. Pin 1 is +15 volts, pin 2 is +5 volts, pins 3 and 5 are grounded. Pins 10 and 12 are the communication ports on the LORAN PC board, with pin 10 a receive command line and pin 12 the transmit line. The schematic diagram also includes a pinout for those computers that use a 9-pin connector for the RS-232 port, like my Tandy 1400 LT.

The computer used was running DOS 3.3 and GWBASIC. The BASIC program sends a data message to the PC board via the RS-232 port instructing the Loran receiver to do a task. The command is: Send the capital letter "A" "carriage return" "line feed" and the receiver will respond with data on position in respect to latitude/longitude, and a certainty factor in decimal on what accuracy or error distance the program calculation has determined to be the maximum error. Kerry put this format into a BASIC program; the listing for this program is shown in Figure 3.

The additional steps at the end of the program are part of a routine to read the Loran receiver oscillator and

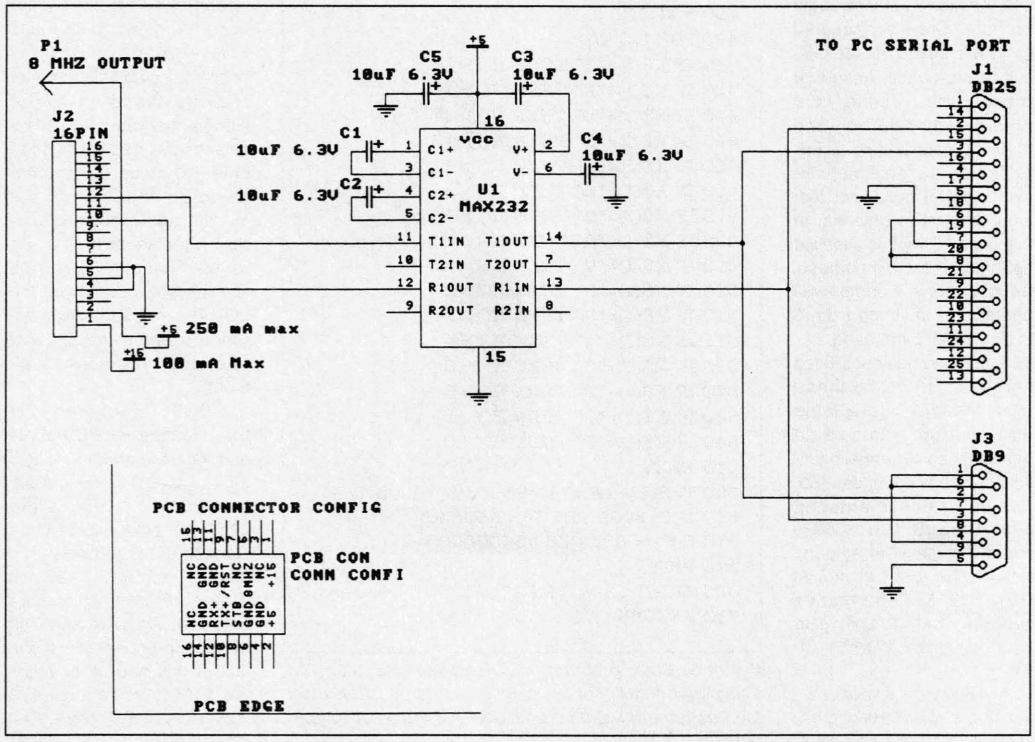

Figure 2. Schematic for Maxim-232 RS-232 PC-LORAN adaptor.

report what its frequency is, as compared to a precise cesium or ribidium oscillator at the LORAN transmitting site. The error will be in the transmission medium, which is minimum compared to WWV HF 5, 10 MHz, etc. The Loran receiver's internal program will report the frequency offset of the onboard oscillator and print out the reading. We can connect a frequency counter to the LORAN receiver and monitor this frequency and use it as a transfer standard to calibrate your frequency counter.

The receiver must be receiving Loran signals and be locked up in normal mode. For example, if the program reports the oscillator frequency to be 8.00000234 MHz, your counter connected to the LORAN receiver oscillator pin should read the same frequency to make them agree. Adjust your counter calibration oscillator to make the readings agree. It's a little touch and go, but when LORAN signals are being copied well it gives an excellent transfer standard. Loran master frequency standards are maintained to very near perfection, a few parts in ten to the twelfth. At present there is no reason you cannot obtain calibration to a number of parts in ten to the ninth. We are working on refinements to this step to obtain better frequency transfer results and will report on future findings as they happen.

Let's get back to horizontal dish position and where you are in respect to your horizontal horizon. The LORAN receiver receives a complex signal from a string of stations on 100 kHz and uses the timing and coding pulses to enable the receiver to determine where it is located. This data is part of the serial data that is displayed on the PC computer as the latitude/longitude information for your location. This data could be inserted into one of several grid square programs to allow you to calculate just where you are situated and display the latitude/longitude information as a six-figure grid square location, like DM12LT. The grid square program would have to be modified to accept the data directly from the LORAN receiver. This has not been done at present, but it is a future project. For the time being, operation will have to be manual. Perhaps someone reading this column will incorporate this feature and report back.

The information from the LORAN receiver can be of great benefit to a rover who is working fast-paced contacts to a series of fixed microwave stations operating in contests similar to the ARRL 10 GHz contest. After a set of contacts is made, the rover packs up and moves on to another location 10 miles farther down the road. All equipment and antennas are mobile-mounted, making setup fast. The benefit LORAN would present is determining, with good accuracy, when you are positioned in the area you think you are. For most locations this data can be confirmed by simple map interpolations compared to your surroundings. But when the distance between any distinguishable feature is great, uncertainly is the real answer. Errors in your position can make dish pointing critical at best. Considering that a standard 30" dish has a beam width of less than 3 degrees, horizontal and vertical location is very important for fast contacts on microwave.

Knowing where the fixed station is located is great and can be set up with a compass to good agreement towards that station. However, the fixed station does not know with certainty where you are in respect to a very narrow dish's beam width (less than 3 degrees). If you can provide your location to a specific six-figure grid square and be accurate, this problem can be eliminated with accurate dish positioning and setup. In most cases antennas can be aimed at each other and initial contacts can be made even over paths of several hundred miles. By eliminating wobble from the wheels of frequency and aiming, you will leave uncertainty behind. Knowing where you are and on what frequency provides nearly armchair-quality performance. It's almost like shooting fish in a barrel.

One question remains, I suppose, and that is: How do you take a 100 kHz antenna into the field and make it portable? Well, these systems are made to operate on very short active antennas that have a high-gain preamplifier connected to a short receive antenna for mobile use. An active antenna could be home-brew constructed as its circuitry is not too difficult to reproduce. Power for the active antenna is a normal provision from the LORAN receiver and is furnished on the antenna connector center conductor that feeds the active antenna. In this case 15 volts is supplied up the coax for this purpose. Usually these preamps will operate on anything from 8 to 15 volts at 5 mA or so.

A commercially-produced antenna can be obtained from MAXRAD (available through some ham radio dealers), an antenna products company, for under $50. The basic active antenna model MXLB-100 is $27, and the simplest of antenna mounts (magnetic) model GBN is $15. Performance quoted is -5 dB to unity gain for this compact 100 kHz antenna.

As always, I am experimenting and am working on an active antenna and want to incorporate a ferrite element to give frequency immunity to out-of-band signals that seem to interfere with the basic active antenna circuit. Some of the active antennas are broadband wide-open circuits and as such could receive 60 cycles as well. To prevent this problem I would like to try a simple filter to eliminate out-of-band signals having the antenna resonate at about 100 kHz. A similar problem happened while trying to receive WWVB on 60 kHz. I used a longwire antenna and had so much interference it was not copyable. Placing a filter at 60 kHz in the antenna lead made a marked improvement in performance. I plan to attempt the same thing with the Loran antenna in addition to gain in the circuit. This is still speculative, but some further experimentation will prove or disprove the worth of this plan.

```
10 DIM X$(40)
20 OPEN "com1:1200,N,8,1,RS"AS #1
30 C$="OD"
40 GOSUB 130
50 GOSUB 180
60 C$="A"
65 S=0
70 GOSUB 130
75 PRINT"   LAT   LONG   ST POSER MODE"
80 GOSUB 180
90 C$="B"
95 S=1
100 GOSUB 130
110 GOSUB 180
115 PRINT
120 GOTO 60
130 PRINT #1,C$;
140 PRINT #1,CHR$(13);
150 PRINT #1,CHR$(10);
160 RETURN
170 GOSUB 180
180 D=0
190 X$(D)=INPUT$(1,#1)
195 IF S=1 THEN 210
200 PRINT X$(D);
210 FOR I=1 TO 100
220 NEXT I
230 V= EOF(1)
240 IF V=-1 THEN 280
250 D=D+1
260 GOTO 190
270 END
280 PRINT
281 IF S=1 THEN GOSUB 400
290 RETURN
400 FOR I=2 TO 5
410 IF X$(I)="F" THEN H(I)=15
420 IF X$(I)="E" THEN H(I)=14
430 IF X$(I)="D" THEN H(I)=13
440 IF X$(I)="C" THEN H(I)=12
450 IF X$(I)="B" THEN H(I)=11
460 IF X$(I)="A" THEN H(I)=10
470 IF X$(I)="9" THEN H(I)=9
480 IF X$(I)="8" THEN H(I)=8
490 IF X$(I)="7" THEN H(I)=7
500 IF X$(I)="6" THEN H(I)=6
510 IF X$(I)="5" THEN H(I)=5
511 IF X$(I)="4" THEN H(I)=4
512 IF X$(I)="3" THEN H(I)=3
520 IF X$(I)="2" THEN H(I)=2
530 IF X$(I)="1" THEN H(I)=1
540 IF X$(I)="0" THEN H(I)=0
545 NEXT I
550 T=H(5)+16*H(4)+256*H(3)+4096*H(2)
560 IF T>8000 THEN T=T-65536!
570 OSC#= 8*T/256 +8000000#
575 PRINT
580 PRINT OSC#;" MHz"
710 RETURN
```

Figure 3. Basic program of LORAN receiver operation. This program will print out latitude, longitude, status monitor, position error and Loran mode that the receiver is reporting.

Both Kerry and I have noticed severe interference to the LORAN receiver in tests where the unpackaged receiver was placed on top of or near the computer terminal that was running the BASIC program. Moving the unshielded PC board away from the computer some two feet seemed to cure the problem of the receiver not receiving the LORAN signals. The computer was radiating energy, blocking the receiver. The receiver was connected for these tests on the workbench without benefit of a shielded box or feedthrough capacitors for the DC or computer port connections. This, like anything else, is not a finished product, but it is a starting point, and it provides the fun of picking through surplus material for toys to play with. (See Photo B.)

Well that's it for this month. I hope that the information provided here will assist you with microwave operations in remote locations. Whether you choose to use Loran or GPS for position accuracy is a matter of choice. We have operated without benefit of systems such as this and had a good time. However, it's another toy to put into the toy box for fun, and it offers operation improvement. I hope to have enough time to be able to report further on the LORAN receiver active antenna project and LORAN operation in general next month.

I have a quantity of LORAN receiver PC boards and will make them available for amateur purposes. Tested LORAN PC boards are $25 each postpaid, to U.S./Canadian destinations only (contact me at the address at the beginning of this column). As always, I will be glad to answer questions about this and other related VHF, UHF, microwave subjects. 73 WB6IGP Chuck.

Design and Build a Dummy Antenna

A 40W, 50 ohm RF dummy load with a VSWR of 1.3:1 at 500 MHz.

by Geoff Koehler VE5ZE

A dummy antenna is one of the most basic and essential pieces of test gear in the ham shack. A good dummy antenna must meet two requirements. First, the dummy must be resistive and not reactive at the frequency of the transmitter. The impedance of most military and amateur transmission lines and equipment is 50 ohms, so it is most useful to build a dummy with a 50 ohm impedance. A 50 ohm dummy must present this impedance to the transmitter for maximum transfer of power and proper tuning of the transmitter. Moreover, to be versatile the dummy should not change impedance significantly as a function of frequency. Second, the dummy must be able to safely dissipate the RF energy supplied by the transmitter as heat, and not radiate RF.

The purpose of this article is to describe the design and testing of two simply-built dummy loads that maintain a more-or-less constant impedance at VHF frequencies, and are able to dissipate the power of handheld amateur radios or low-power mobile rigs. In addition, comparisons are made to the performance of a few commercially available dummy loads, one of which was measured (the MFJ-264 dry dummy).

Back to Basics: The Smith Chart

Basically, the Smith chart is a circular graph (Figure 1) where circles of constant resistance and constant reactance form the grid. The only straight line on the chart is the axis of reals, marked "resistance component," along which are centered the circles of constant resistance (Figure 1a). All the points on a circle of constant resistance have an equal value to where they intersect the axis of reals and represent the resistive component of a complex impedance. Constant resistance circles are tangent to the edge of the chart at the infinite resistance point.

Superimposed on these circles are partial circles of constant reactance (Figure 1b) whose centers lie on a line normal to the axis of reals and are tangent to the axis of reals at the edge of the chart. The layout of the chart allows a complex impedance to be plotted in its two components, a resistive component and a reactive component.

Finally, radial scales complete the Smith chart (Figure 1c). Two scales are calibrated in terms of wavelength, and form the outer ring of the Smith chart. One is measured as "wavelengths toward generator," and the other "wavelengths toward load." The entire circumference of the chart represents one-half wavelength.

All Smith charts have a characteristic impedance of 1 ohm, and are normalized to the characteristic impedance of the system that you are working with. For example, a 50 ohm transmission line has a normalized value of Z/Zo (50/50) = 1. On this scale a resistive 120 ohm load would have a resistive component of 120/50 = 2.4 ohms. In this way, the same chart can be used for any characteristic impedance.

Any impedance, regardless of value, can be plotted on the Smith chart. Impedances can be generally broken down into two components: a resistive component and a reactive component (either capacitive or inductive). These usually take the form of a complex number: Za = Ra + jXa, where R represents the resistive (real) component and X represents the reactive (imaginary) component. The sign of the reactive component determines whether the reactance is capacitive (negative) or inductive (positive). The completed Smith chart is shown on Figure 1d. Smith charts are also available in expanded form, which is useful when measured impedances all plot close to the center of the chart, or are already normalized to 50 ohms.

The primary use of the Smith chart in this article is to display graphically the complex impedances measured in the dummy loads at VHF frequencies, and convert these impedances to a more familiar form, the calculated VSWR at the transmitter. A good article on the various uses of the Smith chart, written by Jim Fisk W1DTY, appeared in the November 1970 issue of *Ham Radio* magazine (see "References" at the end of this article).

"It is also important to use only carbon and not wire-wound resistors because wire-wound resistors will become reactive at high frequencies."

Dummy Load Design

Two dummy loads of different design are considered (Figure 2). While a simple carbon resistor remains resistive to several hundred MHz, a dummy capable of dissipating more than about 2 watts must be built from a number of resistors. At VHF frequencies, most multi-resistor dummies become reactive, as well as simply resistive. Therefore, as the frequency increases the design of the dummy load becomes important.

Both dummies are constructed from about 20 2 watt carbon resistors, some double-sided copper-clad board, and an RF connector. I used a type-N connector, but a BNC connector will work, too. UHF connectors should work up to about 150 MHz, but at higher frequencies these connectors may compromise the performance of the dummy. All other things being equal, UHF connectors should not be used, although they are the most common on amateur equipment. It is also important to use only carbon and not wire-wound resistors because wire-wound resistors will become reactive at high frequencies. One dummy, which I call the DIP dummy, consists of a dual-in-line arrangement of resistors, while the other is of radial design.

To build the DIP dummy, 22 1.5k 2W resistors and two pieces of double-sided copper-clad fiberboard are needed (Figure 2a). Both are about 5/8" wide; the top board is 5" long, and the bottom board is 6-3/4" long with a tapered end. For the resistors, a total of 22 small holes are drilled in two rows of 11, about 3/8" apart. Solder the resistors between the two boards. You will have to solder all the resistors on one board first, and then fit the other board onto the resistor leads, and solder. Make sure to use a hefty soldering iron, because good solder joints are important. Mount the RF connector in the aluminum box, and solder the tapered end of the bottom plate directly to the center conductor of the RF connector. The top plate is grounded to the box by a sheet of copper foil which can either be soldered directly onto the top plate or bolted through with 4-40 machine screws. The purpose of the tapered bottom plate and the copper foil is to decrease, as much as possible, lead inductance in the dummy. Finally, mount the bottom plate on an insulating stand-off to the bottom of the aluminum box.

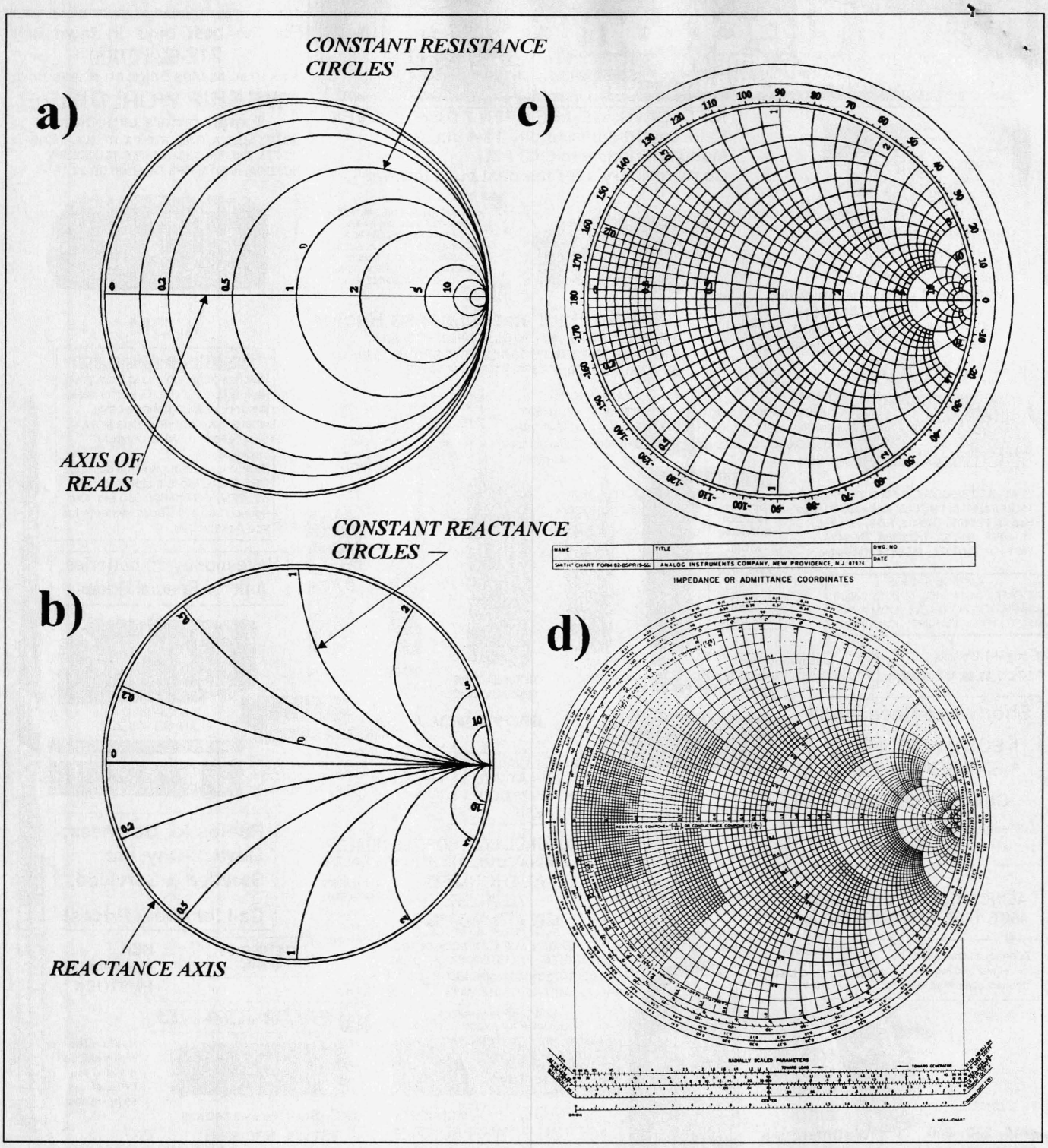

Figure 1. Construction of the Smith chart: a) constant resistance circles; b) partial circles of constant reactance; c) radial scales; d) completed Smith chart. Modified after Fisk, 1970.

The radial dummy is built in a similar manner, except that the RF connector is bolted directly to the ground plate, with the center conductor soldered to the back plate with a piece of large (less inductance) hookup wire (Figure 2b). Twenty 1k resistors are arranged around a 1-1/2" circle. As with the DIP dummy, it would be a good idea to mount the dummy in an aluminum box to help shield the dummy and prevent any grounded surface from contacting the back plate of this dummy, where there will be RF voltage.

Measurement of Complex Impedance

Measurement of complex impedances can be performed with an impedance bridge and a signal generator. An impedance bridge that, with careful attention to construction, should work at VHF frequencies is described by Henry Keen W2CTK. For the dummy antennas in this article, I used an alternate setup which consisted of a Hewlett Packard 608A Signal Generator, a power divider, a couple of 10 dB pads, and a Hewlett Packard 8405A Vector Voltmeter (Figure 3).

In this setup, V_A represents the incident voltage only, because the end is terminated in a purely resistive 50 ohm load and therefore there is no reflection. V_B, however, will represent the vector sum of the incident voltage and the reflected voltage. The ratio

Whether you DX or ragchew, Pride Tubes can help you be heard

- 100% RF Tested
- Industry's Best Warranty
- Competitive Prices

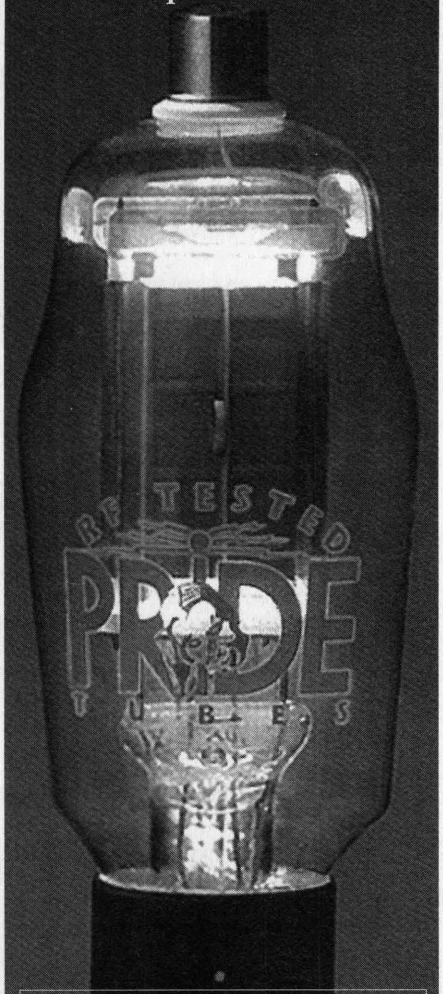

High-Quality vacuum tubes including:

12 BY7A	811A	3-500C
6146B	572B	3-500Z

Look for us at the Huntsville Hamfest August 20-21

RF TESTED PRIDE TUBES

8200 South Memorial Parkway
Huntsville, AL 35802
Telephone 800 638 3925
or 205 650 5522
FAX 205 880 8077

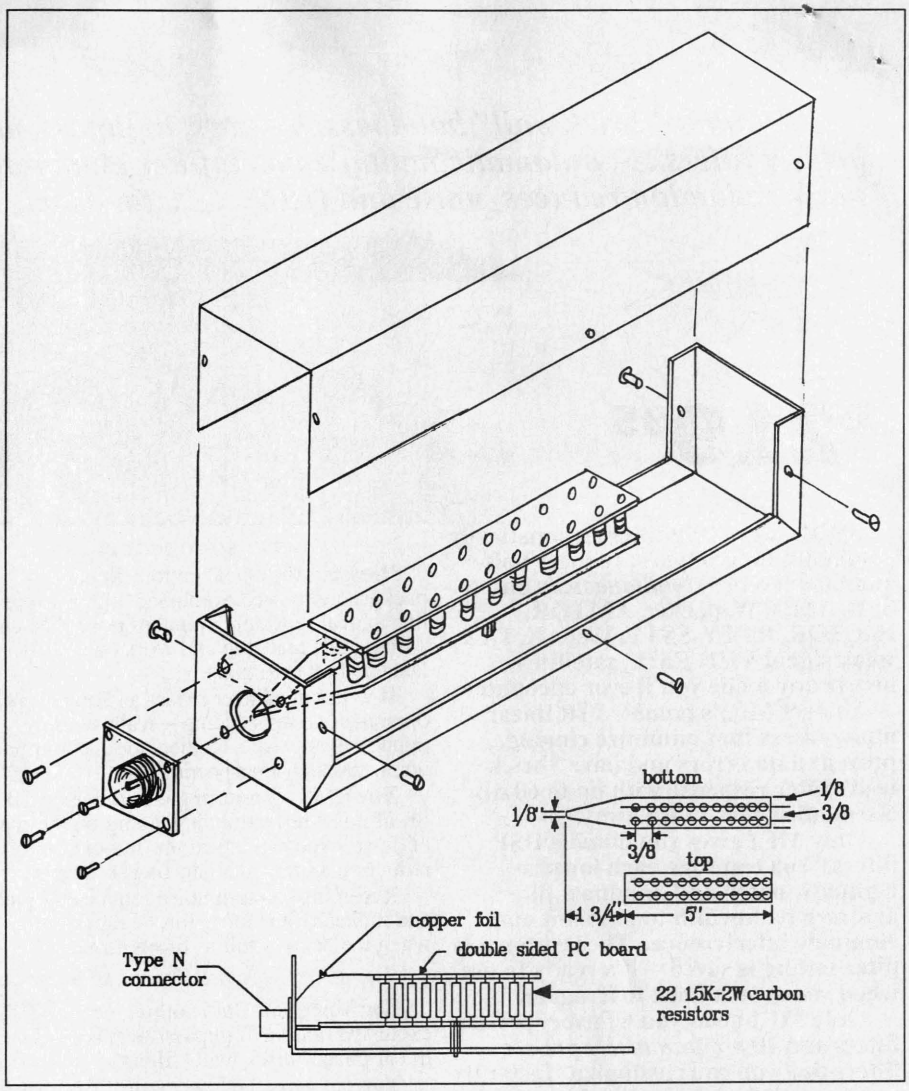

Figure 2 (a). Construction detail of the "DIP" dummy.

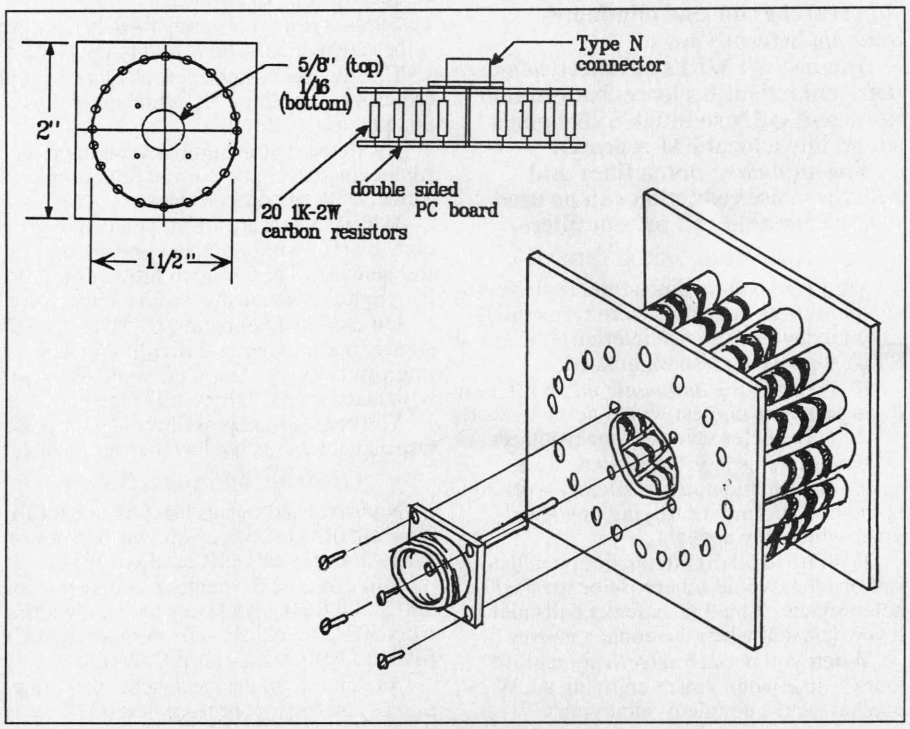

Figure 2. (b) Construction detail of the radial dummy.

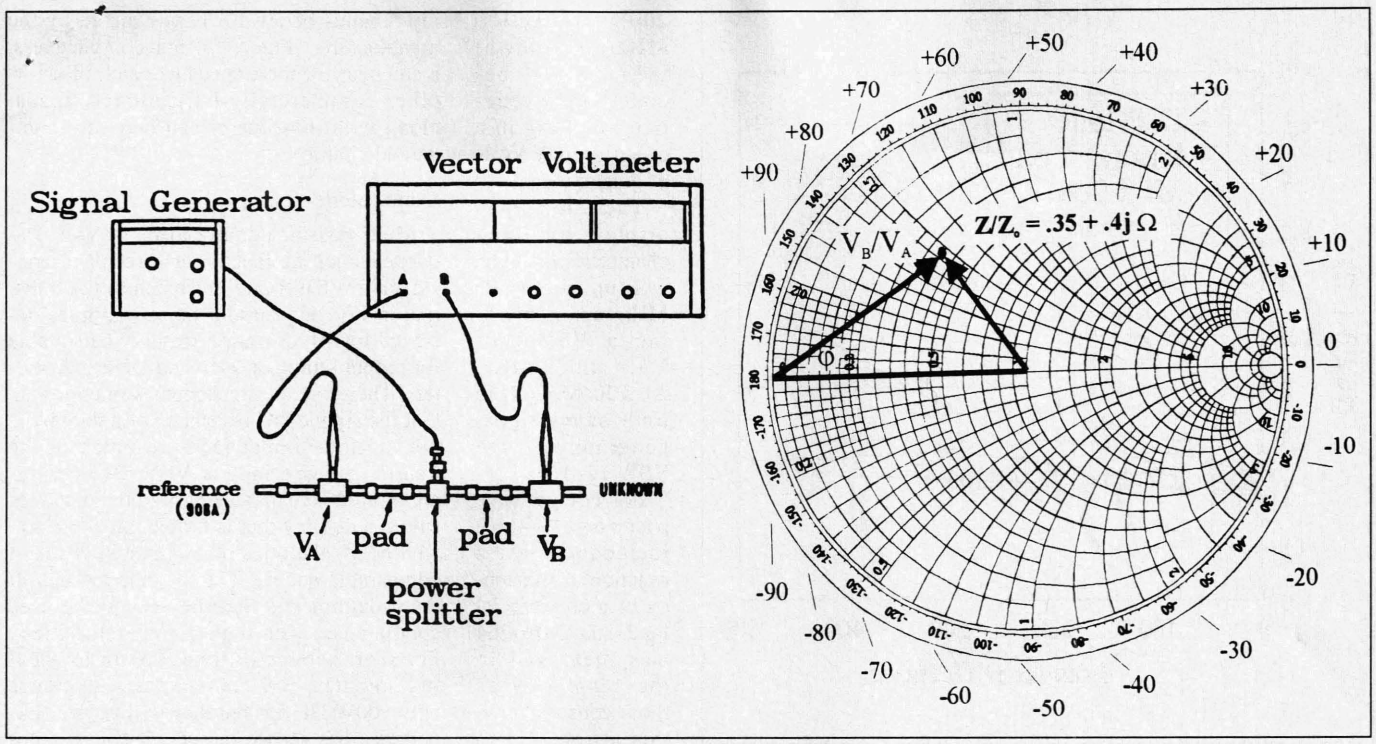

Figure 3. Complex impedance measurement using the Vector Voltmeter.

V_B/V_A is the vector voltage ratio between a 50 ohm resistive load and the load under test. This is the resistive (or real) component of the complex impedance of the load. To find the reactive component, the phase difference (m) between V_A and V_B are measured. If V_B lags V_A, the reactive (imaginary) component is capacitive and the phase difference is negative; if V_A leads V_B it is inductive and the phase difference is positive. These two measurements, V_B/V_A and øB-A, can be plotted on the Smith chart (Figure 3). This task is then repeated for a variety of frequencies to calculate the impedance of the load as a function of frequency.

Results

Measured complex impedances of these two loads are shown in Figures 4 and 5. The DIP load remains essentially resistive up to about 10 MHz, after which it becomes reactive to a maximum VSWR of 1.5:1 at 100 MHz. Because it has a DC resistance of 68 ohms, there is a small mismatch with 50 ohm equipment at low frequencies (VSWR = 1.4:1). The experimenter may be able to get better results at VHF frequencies by simply clipping off pairs of resistors with a pair of diagonal cutters. However, this will probably result in a higher VSWR at low frequencies. This aside, this dummy is surprisingly good, and should be usable up to about

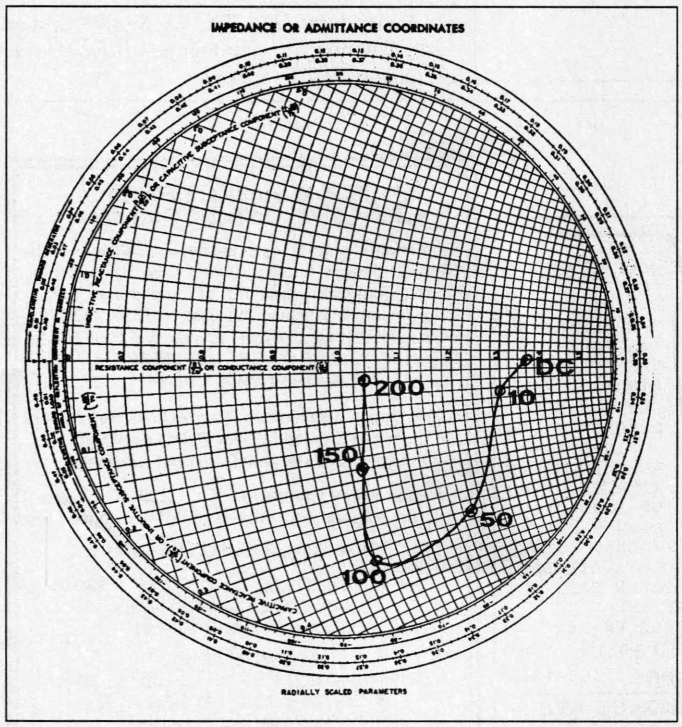

Figure 4. DIP dummy impedance from 0 to 200 MHz. The Smith chart is in expanded form.

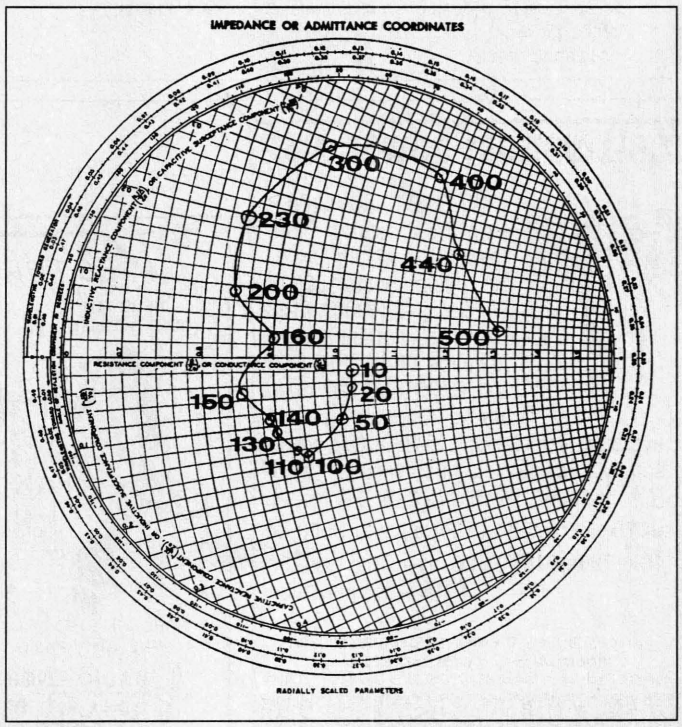

Figure 5. Radial dummy impedance from 10 to 500 MHz. The Smith chart is in expanded form.

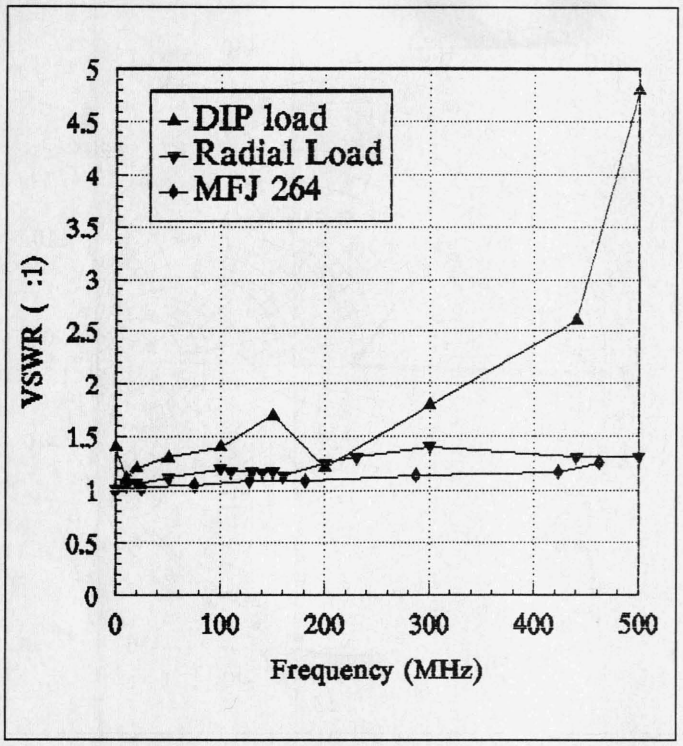

Figure 6. VSWR of dummy antennas at various frequencies. Included for comparison is the MFJ 264 dry dummy.

200 MHz. At 300 MHz (not shown) the dummy becomes very reactive, resulting in a calculated VSWR of greater than 4:1!

The radial load displays excellent characteristics, even well up to the 300 MHz region, reaching a VSWR of 1.2:1 at 300 MHz. At 500 MHz (the limit of my signal generator) the VSWR is 1.3:1.

For comparative purposes—the impedance as a function of frequency of a commercial load—the MFJ-264 was measured in the same way as those constructed in this article. Up to 500 MHz, the VSWR of this dummy remains below 1.3:1, as claimed by the manufacturer (Figure 6). For completeness, a summary of the impedance, etc., of a few other commercially-built dummy loads, along with those described here, are compared in Table 1.

Table 1. VSWR of Dummy Loads from 0-500 MHz

Dummy	0-100 MHz	200 MHz	500 MHz	Power**(W)	Price***
Ten Tec 239	1.1:1*	1.1:1*	2:1*	75	$60
MFJ 260 B	1.3:1*	1.5:1*	——	90	$30
MFJ 262	1.5:1*	——	——	200	$80
MFJ 264	1.1:1 (<1.3:1)	1.1:1 (<1.3:1)	1.3:1 (<1.3:1)	75	$60
DIP	1.3:1	1.1:1	5:1	40	$10
Radial	1.2:1	1.2:1	1.3:1	40	<$10

* Manufacturer's specifications: Where both manufacturers specifications and measured values are available, the manufacturer's values are shown in parentheses.
** Continuous duty.
*** Prices approximate.

Conclusions

Multi-resistor dummy loads at VHF frequencies can be reactive and result in considerable VSWR and mismatch to the transmitter. For this reason, those dummies designed for HF operation may not be suitable for proper tuning of VHF and UHF transmitters. Therefore, design becomes important in that the simple DC resistance of a dummy is not the total impedance presented to the transmitter, especially at VHF. Two designs are offered here that are easy to build and result in a dummy that is usable into VHF, are well below the price of commercial loads of comparable quality. The major drawback of these dummies is that they cannot be used continuously with high-power transmitters. For short periods of time, say up to about two minutes, you can use these dummies with 100W HF rigs but they will get hot. Experience has shown that about two minutes of keydown at 80W will melt the solder on the dummy!

Acknowledgments

I would like to thank the members of the Institute of Space and Atmospheric Studies at the University of Saskatchewan, who were nice enough to loan me their Vector Voltmeter, and always had the time to answer my questions. 73

References

Jim Fisk W1DTY, "How to Use the Smith Chart," *Ham Radio,* November 1970, p. 17.

Henry Keen W2CTK, "A Simple Bridge for Antenna Measurements," *Ham Radio,* September 1970, p.34.

COLLINS 30S1 POWER AMP

1 KW LINEAR AMPLIFIER amplifies signal from KWM-2A and similar S-Line equipment to 1000 W PEP using 4CX1000A/8168 PA tube (not included). Requires 80 W PEP SSB and 60 W PEP CW drive power. Manually tuned in five band selections; 115/230 VAC power supply. Military surplus "winged" label; Not "like new"! 30.6x17x16.8, 200 lbs sh.

USED-not tested/less PA tube **$900.00**

4CX1000A/8168 TUBE, used-"lab tested", **$195 w/PA purchase**

Prices F.O.B. Lima, O. • VISA, MASTERCARD Accepted.
Allow for Shipping • Write for latest Catalog
Address Dept. 73 • Phone 419/227-6573 • Fax 419/227-1313

FAIR RADIO SALES
1016 E. EUREKA • Box 1105 • LIMA, OHIO • 45802

CIRCLE 75 ON READER SERVICE CARD

VECTOR FINDER

ZERO-IN THE SIGNAL!

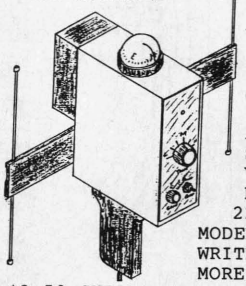

HAND-HELD PHASE SENSE ANTENNAS FOR VHF DIRECTION FINDING. USES ANY FM XCVR. COMPASS GIVES DIRECTION. ARMS FOLD FOR STORAGE. TYPE VF-142 COVERS BOTH 2-MTRS & 220MHZ. OTHER MODELS AVAILABLE. WRITE OR CALL FOR MORE INFO.

$3.50 SHIPPING & CA. ADD TAX) TYPE VF-142 $139.95 619-565-1319

RADIO ENGINEERS
3941 MT. BRUNDAGE AVE.
SAN DIEGO CA.92111

CIRCLE 58 ON READER SERVICE CARD

SAM Amateur Radio Callsign Database

Find Hams quickly and easily by Callsign or by Name. Search for a specified City, State, or Zip Code. Print with standard or customized output. Ideal for mailing lists, QSL's etc. **NEW FOR '94**, search filters that allow you to specify FIRST NAME, LICENSE CLASS, AGE, ADDRESS, or CALL SUFFIX, AREA, OR PREFIX.

SAM Option files include County Cross Reference, License Expiration Date, Full Date of Birth, Previous Calls and Date First Licensed.

Requires IBM Compatible PC, 17.5 MB of hard drive space, and high-density floppy drive.

NOW AVAILABLE ON CD-ROM

Disk Version $39.95 CD-ROM $39.95
SAM OPTIONS $7.50 each
Shipping and Handling $5.00

RT SYSTEMS, INC
8207 STEPHANIE DRIVE, HUNTSVILLE, AL 35802
1-800-723-6922 or 1-205-882-9292
Visa, MasterCard or Discover

Number 21 on your Feedback card

ABOVE & BEYOND

VHF and Above Operation

C. L. Houghton WB6IGP
San Diego Microwave Group
6345 Badger Lake Ave.
San Diego CA 92119

Frequency

Last month we discussed converting a phase-locked synthesizer/oscillator for 2.xxx GHz. This month I will build on last month's project and describe in detail the multiplier, the filter, and the oscillator drive amplifier. These components serve as an oscillator multiplier, which could be used in conjunction with a 10 GHz converter. The attempt here is to utilize inexpensive surplus components and PC boards to fill a need, and to construct a converter package that is small and functional, and doesn't cost an arm and a leg to duplicate.

Falling back for just a minute, I would like to touch base on the synthesizer, in particular on the power supply you construct to power these PC boards. These devices require a very *clean* DC power supply. By that I mean that the ripple content has to be quite pure or else you will have modulation on your oscillator caused by the AC ripple component riding on the DC in your power supply. It does not take much to cause noise or FM modulation on the synthesizer. To make sure this doesn't happen to you, filter your DC supply well.

Pete Bauer W6DXJ, who has done quite a few of the conversion details on the synthesizer unit, recommends using a good voltage regulator to maintain DC regulation. Additionally, using some ferrite beads on the DC distribution leads at the oscillator to suppress AC and other RF will prove useful. I usually bypass the output of my voltage regulators with not just a suitable electrolytic cap, but with a couple of extra bypass types (0.1 µF and 0.001 µF) as well, to cover all bases on the positive lead. See Figure 1 for the schematic detail of power supply configuration.

The PC boards that I am modifying here were part of a microwave transmitter/receiver used on trucks for communication and data. As such, they were built quite ruggedly and, needless to say, are solid-state, with GaAsFETs in almost all of the circuitry. This month I'll describe the second portion of the oscillator system, namely the oscillator multiplier. Please note that this is but one of many methods used to obtain a 10 GHz injection for 10 GHz operation. The PC boards that are described here are being made available; you can order them for $10 per board ppd from the author.

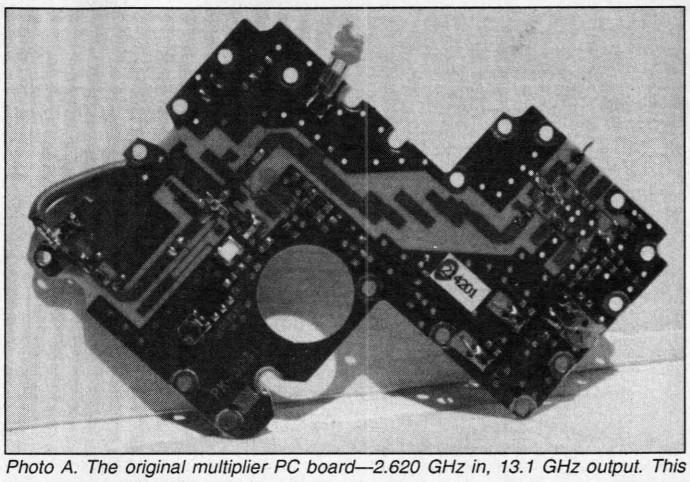

Photo A. The original multiplier PC board—2.620 GHz in, 13.1 GHz output. This uses two Mitsubishi GaAsFETs, MGF-1302.

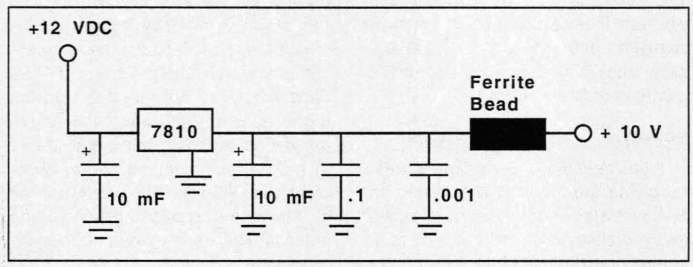

Figure 1. Power supply feed details. Basic voltage regulator power supply; output capacitors vary in value 10-0.1-0.001 µF for wide-range bypass filtering.

A brief description of these PC boards: As stock they were made to operate at 2.620 GHz (synthesizer), and the multiplier was a times-five, providing 13.1 GHz output from the set of PC boards. Multiplication was done in the first stage of the second board in an MGF-1302 GaAsFET device. The output of this stage was coupled into a stripline filter resonant at 13.1 GHz to allow bandpass operation of the desired 5th harmonic and reduce all other frequencies. The filter output is coupled with a small-value capacitor to an output amplifier tuned to 13.1 GHz, another MGF-1302 GaAsFET device.

In the original system, the amplifier of the multiplier assembly was fed to a distribution amplifier system on a third PC board. This board contained an input amplifier and power splitter. A power splitter is a stripline device that looks like a tuning fork with the top terminated in a resistance load. Its purpose is to split the signal (one source) into two equal sources: one source for receive and the other for transmit. Two additional amplifiers are located in the transmit path, and there is one in the receiver path. These amplifiers have been removed from this PC board by cutting the board and making two 10 GHz amplifiers, a two-stage and a single-stage unit. This board is not required in the multiplier modification, but can be used by removing the single- and dual-stage amplifiers and converting into individual amplifiers. These amps can be used at 10 GHz as gain blocks with stripline snowflake retuning from 13.1 GHz. See Figure 2, the splitter board block diagram.

The multiplier PC board is of prime concern now, along with our attempt to modify it to a frequency multiplication of four. In this regard we need to modify the output circuit of the first stage from 13.1 GHz to 10.2 GHz. The stripline filter was too difficult to attempt retuning to 10 GHz. A better method is to eliminate the stripline filter by removing the copper foil with an X-Acto knife. Our plan here is to replace the filter with another type of filter that can be easily constructed and assembled—something easier than the original stripline filter. The answer to this problem is an adjustable cavity resonator tuned to our 4th harmonic.

Where do you find such a filter? In the plumbing section of your hardware store. What we used is a 1/2" copper pipe cap plug. Sounds crazy, yes, but it works perfectly and is easy to adjust. Credit for this filter construction goes to the North Texas Microwave Society for passing on the information on the filter construction.

The copper pipe cap works quite well, being simple to construct and adjust. A finished filter will have about 1 to 1.5 dB loss and a bandwidth of about 50 to 100 MHz. I haven't measured the "Q" of the filter but believe it to be about 100. Essentially, the pipe cap filter is a resonant cavity with two probes, input and output.

These probes are copper or brass pins about 0.030" in diameter and 3/16th" long. The pins are inserted from the trace side of the PC board through to the foil side and are about 3/16" high on the foil side. They are

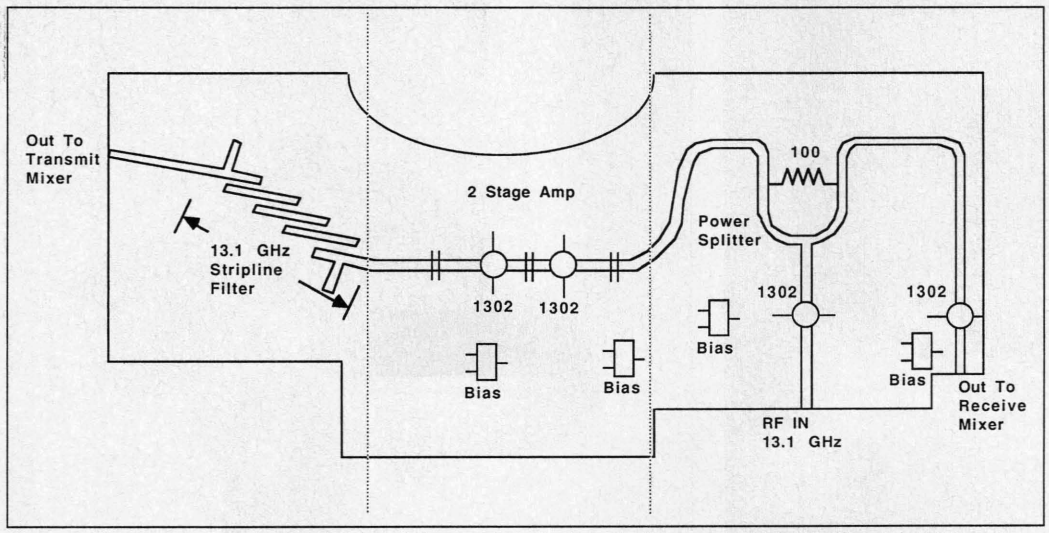

Figure 2. Microwave splitter amplifier PC board diagram. Note the local oscillator mixer drive amplifiers. this PC board uses four MGF-1302 FETs. The dual-stage amp has been cut from the main board and readjusted to 10 GHz.

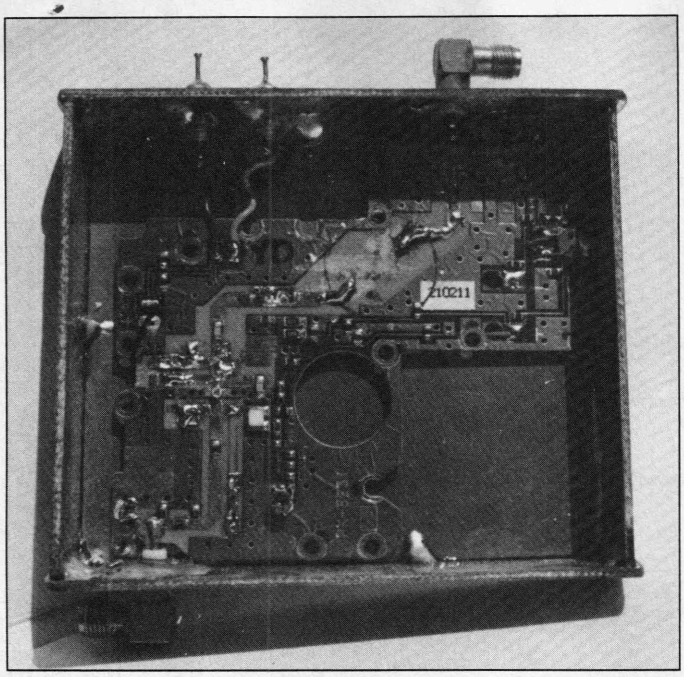

Photo B. The modified PC board, converting the multiplier to a times 4. Note the ink circle mark and the PC strips removed from the filter area, located just above the circle cut-out.

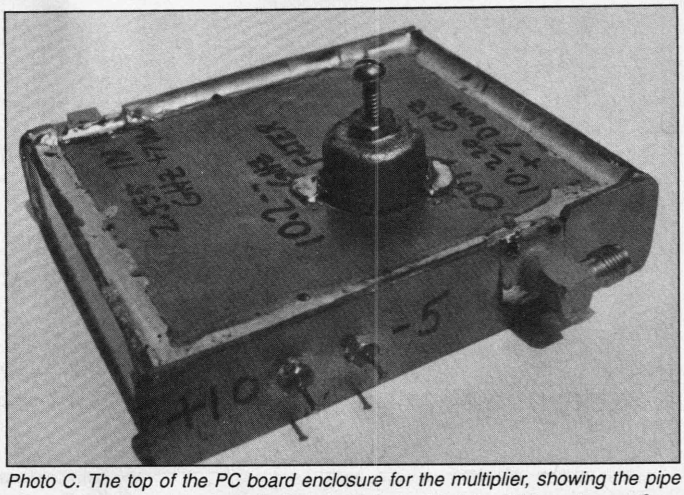

Photo C. The top of the PC board enclosure for the multiplier, showing the pipe cap filter and adjusting screw poking through the lid of the PC board case. Coax connectors for input output and DC feed-through capacitors have been added.

soldered to the remaining ends of the old filter stripline positioned about 1/16" from the inside wall for the pipe cap when it is soldered to the foil side. Note the circle drawn for the pipe cap positioning on the foil side. The stripline that remains from the original stripline filter is now nothing more than 50 ohm stripline which feeds the two probes of the pipe cap filter. You will have to patch the PC board with a few small scraps of copper foil or solder bridge the traces to extend the new 50 ohm stripline to filter probes. See Figure 3 for filter construction details. Exact compliance is not necessary.

I started the modification on the multiplier board by removing the filter traces on the PC board with an X-Acto knife. See Photo A, the original unmodified PC board, and Photo B, the modified PC board. As you can see in Photo B, I drew a circle representing where the pipe cap will be soldered on the opposite side of the PC board, and left copper traces on the stripline side to solder to the probes.

The bottom of the PC board (ground side), where the filter probes are to be, is reamed away to give clearance for the brass pins. This prevents possible grounding of the pins. To ensure this and to give them a rigid structure, I used a portion of Teflon from a scrap SMA microwave connector to slip over the pins for positioning and insulation. If you don't have a connector to scrap, use the pin from a DB-9 or DB-25 connector, as the diameter is just right, and insulate. If you have a Teflon insulator or tubing, slide it over the pin to make the pin rigid and hold the pin vertical and not grounded.

ID-8 Automatic Morse Station Identifier

Compatible with Commercial, Public Safety, and Amateur Radio applications. Uses include Repeater Identifiers, Base Station Identifiers, Beacons, CW Memory Keyers, etc. Great for F.C.C. ID Compliance.

- Miniature in size, 1.85"x 1.12"x 0.35".
- Totally RF immune.
- All connections made with microminiature plug and socket with color coded wires attached.
- CMOS microprocessor for low voltage, low current operation: 6 to 20 VDC unregulated at 6ma.
- Low distortion, low impedance, adjustable sinewave output: 0 to 4 volts peak to peak.
- Crystal controlled for high accuracy.
- Transmitter PTT output (to key transmitter while ID is being sent), is an open collector transistor that will handle 80 VDC at 300ma.
- Field programmable with SUPPLIED keyboard.
- Confirmation tone to indicate accepted parameter, plus tones to indicate programming error.
- All programming is stored in a non-volatile EEPROM which may be altered at any time.
- Message length over 200 characters long.
- Trigger ID with active high or low.
- Inhibit ID with active high or low. Will hold off ID until channel is clear of traffic.
- Generates repeater courtesy tone at end of user transmission if enabled.
- Double sided tape and mounting hardware supplied for quick mounting.
- Operating temperature range, −30 degrees C to +65 degrees C.
- Full one year warranty when returned to the factory for repair.
- Immediate one day delivery.

Programmable Features

- *Eight programmable, selectable, messages.*
- *CW speed from 1 to 99 WPM.*
- *ID interval timer from 1-99 minutes.*
- *ID hold off timer from 0-99 seconds.*
- *CW tone frequency from 100 hz to 3000 hz.*
- *Front porch delay interval from 0 to 9.9 seconds.*
- *CW or MCW operation.*

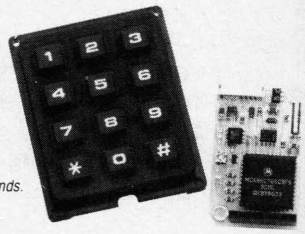

$89.95 each
programming keyboard included

COMMUNICATIONS SPECIALISTS, INC.
426 WEST TAFT AVENUE • ORANGE, CA 92665-4296
(714) 998-3021 • FAX (714) 974-3420
Entire U.S.A. (800) 854-0547 • FAX (800) 424-3420

CIRCLE 10 ON READER SERVICE CARD

Subscribe to ***73 Amateur Radio Today*** Call **800-289-0388**

VIDEO I.D. BOARD

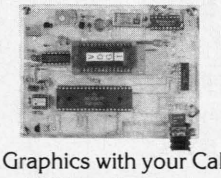

- Custom Graphics with your Call Sign
- 4 Screens (2 Hi-res/2 color bar)
- 12 VDC Operation
- Instant Video ID
- Video Relay for switching in Live Camera Video
- Built-in Automatic Sequencer-Timer (steps through all four screens)

VDG-1 with pre-programmed calls:
$99
Call or write for catalog of available graphics

ELKTRONICS
12536 T.R. 77 • Findlay, OH 45840
(419) 422-8206

CIRCLE 8 ON READER SERVICE CARD

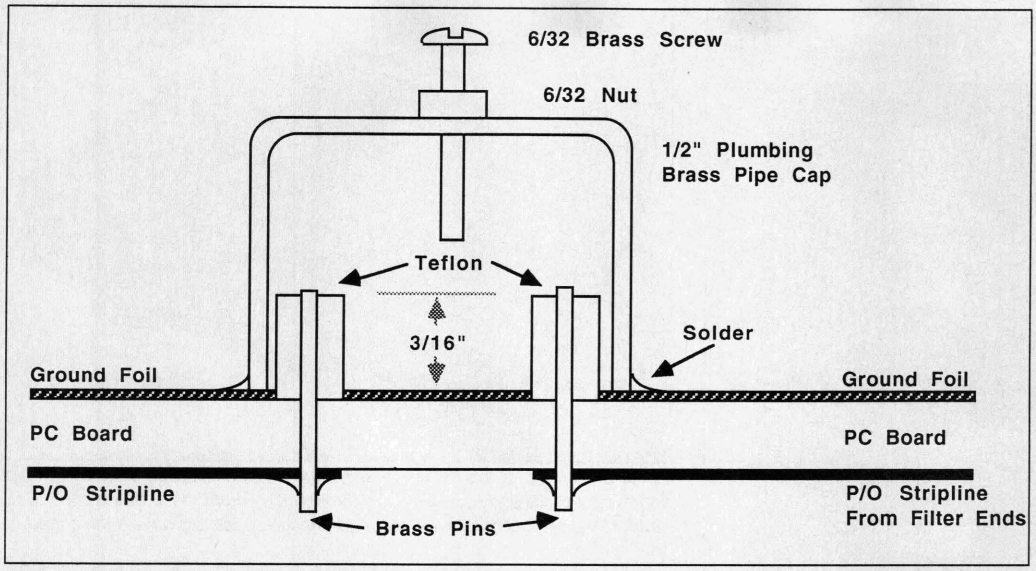

Figure 3. Pipe cap filter construction for 10 GHz operation. The brass pins are 3/16" long inside cavity. Round Teflon insulator is slipped over the pins to hold them vertical and to insulate from the cavity and the 6-32 screw.

Prepare the top of the pipe cap by drilling a hole in the top center of the cap. Tap for 6/32 threads and solder a brass nut over the hole. I used a steel screw to facilitate this operation, as the steel screw will not take solder well. The steel screw is to be used as a centering tool. The idea here is that the steel will resist the soldering operation and only allow the nut to be soldered to the top of the pipe cap assembly (centered on the hole drilled for the 6/32 screw). After the solder cools, the steel screw can be removed from the cavity. A brass 6/32 screw with a nut run up on the screw is placed into the cavity top. If you are not sure what kind of screw you have, test it with a magnet. I am sure you will identify many different screws that you thought were steel or plated steel, and you'll find that they are nonmagnetic and are most likely plated brass. Any of these are OK to use for cavity retuning. See Figure 3 and Photo C for pipe cap cavity details. The design is rather forgiving in the positioning and length of the probes and frequency resonance. The loss of the filter and coupling will be affected by probe length. I find about 3/16" to be a good choice for probe length.

When soldering the cavity (about and insulated from the coupling pins) to the PC board position, (use some form of sleeving on the pins to ensure they stand straight up and are insulated from the cavity side wall. Be ginger with solder in this application and try not to get solder inside the filter—it's very lossy at microwave levels. Don't overheat the pipe cap as components on the other side of the PC board might unsolder with too much heat. Tack-solder the cavity to the ground foil over the probes, near your planned ink line drawn on the opposite side of the board. An exact fit is not necessary; just center the 6/32 screw about the center of the probes and keep the cavity side wall off of the probes. If the cavity wall touches the Teflon, that's OK.

As you can see from Photo B, the finished multiplier assembly I made used scrap copper PC board material to fashion a case for the multiplier. It also made it quite easy to attach coax connectors to the very soft Teflon PC board. This gave the board a rigid feel that made modifications and operations easier on the workbench. During the re-adjustment step of modification I found that most of the gain improvements to the circuit were made on the

EMITTER LOCATION

Direction Finding System Tracks Down

- **Stuck Microphones**
- **Cable TV Leaks**
- **Jammed Repeaters & Cell Sites**

Models available with computer interface, synthesized speech, for fixed or mobile use, covering 50 MHz to 1 GHz. Call or fax for details

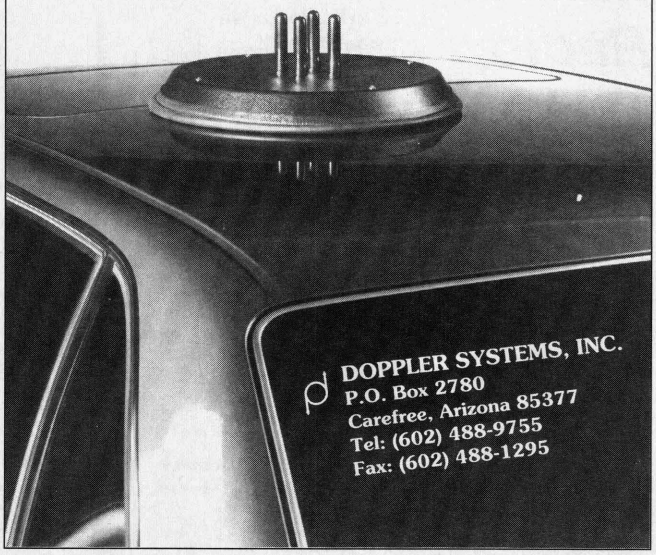

CIRCLE 13 ON READER SERVICE CARD

RADIO ELECTRONICS AND COMMUNICATION TECHNOLOGY MADE EASY—NO SHORTCUTS!!

➢ FULLY UNDERSTAND THE BASICS—STEP-BY-STEP

➢ BOOKS PACKED WITH DETAILS, EXPLANATIONS AND ILLUSTRATIONS—EXCELLENT FOR SELF AND CLASSROOM STUDIES:

1. Matter, Energy, and Direct Current
2. Alternating Current and Transformers
3. Electronic Tubes and Power Supplies
4. Solid State Devices and Power Supplies
5. Amplifiers
6. Wave-Generation Circuits
7. Propagation, Transmission Lines and Antennas
8. Amplitude and Phase Modulation
9. Microwave

PURCHASES OF:

- **1 TO 2 BOOKS: $12.95 + $1.50 S&H (EACH)**
- **3 TO 5 BOOKS: $11.95 + $1.00 S&H (EACH)**
- **6 OR MORE: $10.95 + $ .75 S&H (EACH)**

(FOREIGN ORDERS INCREASE S&H BY $5.00)

30-DAY MONEY-BACK GUARANTEE (MINUS S&H)
MC/VISA ACCEPTED (INCLUDE NUMBER AND EXPIRATION DATE)
SEND CHECK/M.O. (NO C.O.D.) TO:

LATHROP PUBLICATIONS
P.O. BOX 207
UPPER MARLBORO MD 20773

CIRCLE 197 ON READER SERVICE CARD

multiplier stage. Initially, I connected about +5 dB @ 2.555 GHz to the multiplier input and tried to observe output at 10.5 GHz, the 4th multiple. I cheated and used a bench oscillator for this retuning test and not the modified synthesizer (versatility and test control).

I connected a power meter to the output and found almost nothing for power out (less than -20 dBm). I started to tune the pipe cap filter (inserting the screw into cavity), and as I did the power increased. I tuned the filter for the best power output I could obtain and it was about a -6 dBm. I took a look on the spectrum analyzer and found out that the frequency was what I wanted, and further identified that the filter would only tune to the fourth harmonic, making the conversion of the filter quite easy. In other words, I was quite lucky. With this in mind, I am quite confident that you will not need a spectrum analyzer to make modifications as only a microwave power meter is needed.

To bring the power up I applied the standard "snowflake" copper tuning tools to the PC board to find hot spots. For those not familiar with tuning microwave circuitry and "snowflaking," I am referring to using bits of copper material to be moved about the RF portions of circuit board to retune the circuitry. Instead of moving bits of copper about the board much like a shuffleboard, construct some tools to do the job for you. The tuning tools are made by super-gluing small bits of copper foil to toothpicks. I used round toothpicks and cut off one end to make a slight flat spot to adhere the copper bit to. Make several of various-sized copper bits. I started off by getting some copper foil (from hobby or model railroad shops) and cutting it into miniature pieces about 0.050 to 0.100 square—the exact size is not important. I usually close my eyes and chop up a small piece of copper foil and then select what I want from the cutoffs. Some of these bits will be attached to toothpicks, and the others will be soldered on the PC board traces, duplicating the size and position that the toothpick "snowflake" test produced.

When moving the tools about the PC board, keep the DC power on and be careful not to short anything out—go slow. Remember to turn off DC power when you solder copper bits to the trace, with a duplicate bit of copper as indicated by the tuning tool, on a hot spot. These hot spots found in the "snowflake test" are places where you either add or remove copper from the existing trace. If by coming near a trace the power reduces, this might indicate that you need to remove copper foil or modify the trace at this point. It's like the drop in power is saying, "I don't want any more copper circuitry (in the form of traces), but I want less, so remove some (copper foil)." In some cases the width of a PC board trace need be reduced.

When making any changes, do it in a slow methodical manner and do not make large changes; go slow—a few thousandths at a time—and check for change. The rule is: wide traces, very low impedance; narrow traces, very high impedance. A 50 ohm trace on this type of PC board is about 0.035" wide or so. My hedge on this is that I don't know the exact dielectric constant for the material to calculate it exactly, so this is an estimate. As an example, 100 ohms = 0.015", and 20 ohms = 0.100" wide.

If, on the other hand, power increases when the area is approached by moving the toothpick with a copper bit attached, add copper to this area. Be careful to not short out traces with the copper bits as DC power is on when you are testing with the toothpick tools. When you add or remove traces to the board, turn off the power and use a static-free work station and grounded soldering iron. A temperature-controlled iron is the best iron to use. They operate from low voltage DC and are usually grounded. Static and high voltage soldering irons can produce enough voltage to zap a sensitive GaAsFET device. To minimize static at my work station, I connect a ground wire from my iron's ground to the work piece, a copper circuit board that serves as a common grounded work station. Don't forget the wrist strap with a built-in high resistance discharge path. The high resistance is there for your protection, as well as for static elimination. Ground the PC board with a clip lead to the common workpiece. Everything at common ground should eliminate any static problems.

In hindsight, I found that most of the gain improvements were made in the multiplier stage of the PC board. I obtained a +7 dBm output at 10.220 GHz by using a drive source at 2.555 GHz. No retuning was necessary in the 13.1 GHz stage to obtain this result. More power or better efficiency could be obtained by retuning the 13.1 GHz stage. I just stopped the modification without retuning this stage as +7 dBm power was all that was needed for a good mixer injection level. If you want to re-tune the multiplier's amplifier go about it in the same manner as the multiplier stage.

Well that's it for this month. As always, I will be glad to answer questions about this topic and related material. Please Send an SASE for a prompt reply. Next month I will cover a surplus Loran receiver that can be computer-operated to give you Lat-Long positions and convert them to six-figure grid squares for grid-square hopping. 73 Chuck WB6IGP

Number 22 on your Feedback card

DEALER DIRECTORY

DELAWARE
New Castle
Factory authorized dealer! Yaesu, ICOM, Kenwood, Ten-Tec, AEA, Kantronics, DR-SI Mfg., Ameritron, Cushcraft, HyGain, Heil Sound, Standard Amateur Radio, MFJ, Hustler, Diamond, Butternut, Astron, Larsen, and much more. **DELAWARE AMATEUR SUPPLY, 71 Meadow Road, New Castle DE 19720. (302) 328-7728.**

NEW JERSEY
Lodi
North Jersey's newest Two Way Radio and Electronics Dealer is now open. Sales of Ham, Business, Marine and C.B. two way equipment as well as Scanners, Shortwave, Electronic Kits, Antennas, Books, Cable Boxes and more. Friendly service and low prices. **Advanced Specialties, 114 Essex Street, Lodi NJ 07644. (201) VHF-2067.**

NEW JERSEY
Park Ridge
North Jersey's oldest and finest Shortwave and Ham Radio Dealer. Three minutes from Garden State Pkwy and NY Thruway. Authorized Dealers for AEA, Alpha Delta, Diamond, ICOM, Japan Radio Company, Kenwood, Vectronics, Yaesu, Ham Sales, Lee WK2T. **GILFER SHORTWAVE, 52 Park Ave., Park Ridge NJ 07656. (201) 391-7887.**

NEW YORK
Manhattan
Manhattan's largest and only ham Radio Store, also full line of Business, Marine, Aviation, Shortwave Radios and Scanners, and Cellular Phones and Beepers. Large selection of Books, Antennas, Test Equipment, coaxial cable and parts. Full Service Repair Lab on premises. Our 44th Year . . . We carry all major lines: MOTOROLA, ICOM, KENWOOD, YAESU, BENDIX-KING, ASTRON, AEA, SONY, PANASONIC, MFJ, CCTV CAMERAS AND MONITORS, BIRD WATTMETERS, FREQUENCY COUNTERS, SCANNERS, HYGAIN, VIBROPLEX, HEIL, CALLBOOK, ARRL, OTHER PUBLICATIONS. Open 7 days M–F, 9–6 p.m.; Sat., 10–5 p.m. Sun. 11–4 p.m. We ship *Worldwide*. Call, Fax, or write for information and prices. Your one Source for HAM and Business Radios . . . **BARRY ELECTRONICS, 512 Broadway, New York NY 10012. (212) 925-7000. FAX (212) 925-7001.**

OHIO
Columbus
Central Ohio's full-line authorized dealer for Kenwood, ICOM, Yaesu, Alinco, Japan Radio, Standard, AEA, Cushcraft, Hustler, Diamond and MFJ. New and used equipment on display and operational in our new 10,000 sq. ft. facility. Large SWL Department, too. **UNIVERSAL RADIO, 6830 Americana Pkwy., Reynoldsburg (Columbus) OH 43068. (614) 866-4267.**

PENNSYLVANIA
Trevose
Authorized factory sales and service. KENWOOD, ICOM, YAESU, featuring AMERITRON, B&W, MFJ, HYGAIN, KLM, CUSHCRAFT, HUSTLER, KANTRONICS, VIBROPLEX, HEIL, CALLBOOK, ARRL Publications, and much more. **HAMTRONICS, INC., 4033 Brownsville Road, Trevose PA 19047. (215) 357-1400. FAX (215) 355-8958. Sales Order 1-800-426-2820.** Circle Reader Service 298 for more information.

DEALERS: Your company name and message can contain up to 50 words for as little as $420 yearly (prepaid), or $210 for six months (prepaid). No mention of mail-order business please. Directory text and payment must reach us 60 days in advance of publication. For example, advertising for the April '92 issue must be in our hands by July 1st. Mail to *73 Amateur Radio Today*, 70 Rte. 202 N, Peterborough, NH 03458.

PC HF FASCIMILE 7.0 $99

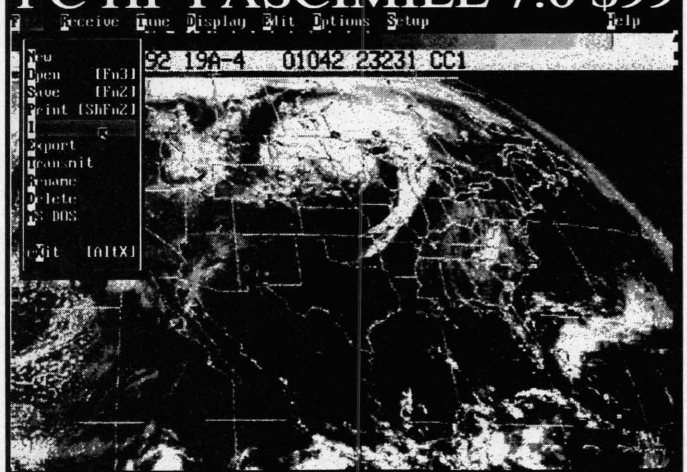

Now under Windows or DOS

PC HF Facsimile is a simple, yet comprehensive shortwave fax system for the IBM PC and compatibles. It includes an FSK demodulator, advanced signal processing software, tutorial cassette, and complete reference manual. With your PC and SSB revelver getting FAX is a snap. Here are just some of the features:

- Mouse or Menu Driven
- Unattended Operation
- Easy Tuning Oscilloscope
- Start/Stop Tone Recognition
- Up to 256 Levels
- Single Scan per Line with EMS Memory
- Programmable Colorization
- Brightness and Contrast Control
- Transmit Option Available
- Image Zoom, Scroll, Pan, Rotation
- Grayscale on all Popular Printers
- Worldwide Broadcast Schedule
- Worldwide Frequency Listing
- CGA,HGA,EGA,VGA & Super VGA
- Time Lapse Frame Looping
- Slide Shows
- Programmable IOC & Line Rates
- Image Cropping
- Automatic Radio Control
- NAVTEXT & RTTY Option Available

Call or write for our free catalog of products. Visa & MasterCard welcome.

Software Systems Consulting
615 S. El Camino Real, San Clemente, CA 92672
Tel.(714) 498-5784 Fax.(714) 498-0568

CIRCLE 250 ON READER SERVICE CARD

World's Smallest 10 GHz ATV Transmitter

Build one on a PCB using only a few components!

by Angel Vilaseca HB9SLV and Jean-Pierre Morel HB9RKR

The availability of cheap surplus GaAsFETs lately has made a lot of microwave experimenting possible for amateurs. This article describes a new kind of amateur 10 GHz low-power transmitter using a surplus GaAsFET, mounted on a tiny piece of Teflon/glass PCB. Wideband FM modulation is possible for ATV operation.

As microwave-oriented amateurs, we (the authors) began experimenting back in the '80s, using Gunn diodes in waveguide assemblies. These, provided they were homebuilt, using cheap surplus diodes, were very cost-effective when compared with commercial transceivers (e.g. the Gunnplexer). The main disadvantage was the "plumbing." It took a lot of time and a fairly well-tooled workbench to build waveguide-based designs. For instance, some parts, like the screws used to hold the diodes, could only be made with a lathe.

However, if you were ever drawn away from the 10 GHz band by the mechanical difficulties, this article is for you. The 10 GHz transmitter we are describing could hardly be simpler.

The GaAsFET Oscillator

Trying to design a GaAsFET oscillator with PUFF, a computer program previously described in this magazine, we first considered a design like the one in Figure 1.

Like in many oscillators, the oscillation takes place if there is an adequate feedback from an amplifier's output to its input. In the oscillator shown in Figure 1, the feedback is provided by the two close-coupled stubs connected to the gate and drain microstriplines. The source terminals are connected to the ground plane.

Making the Oscillator Radiate

Any conducting patch etched on a PCB radiates a part of the energy it is fed with. If the dimensions of the patch are small in terms of wavelength, little energy is radiated. As the patch dimensions increase, radiation increases too, until a λ/2 patch dimension is

Continued on page 18

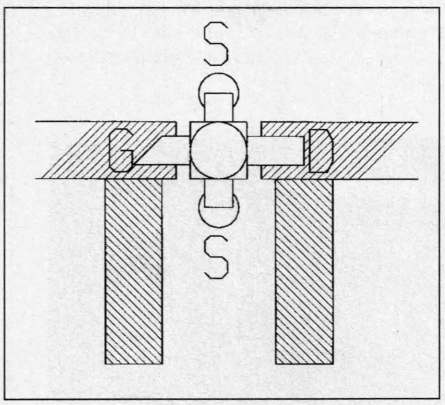

Figure 1. A GaAsFET oscillator. G, D, and S = gate, drain, and source respectively.

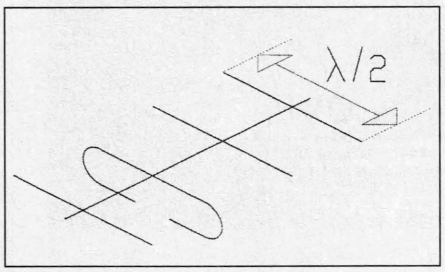

Figure 2. In a yagi antenna, the elements are about a half-wavelength long.

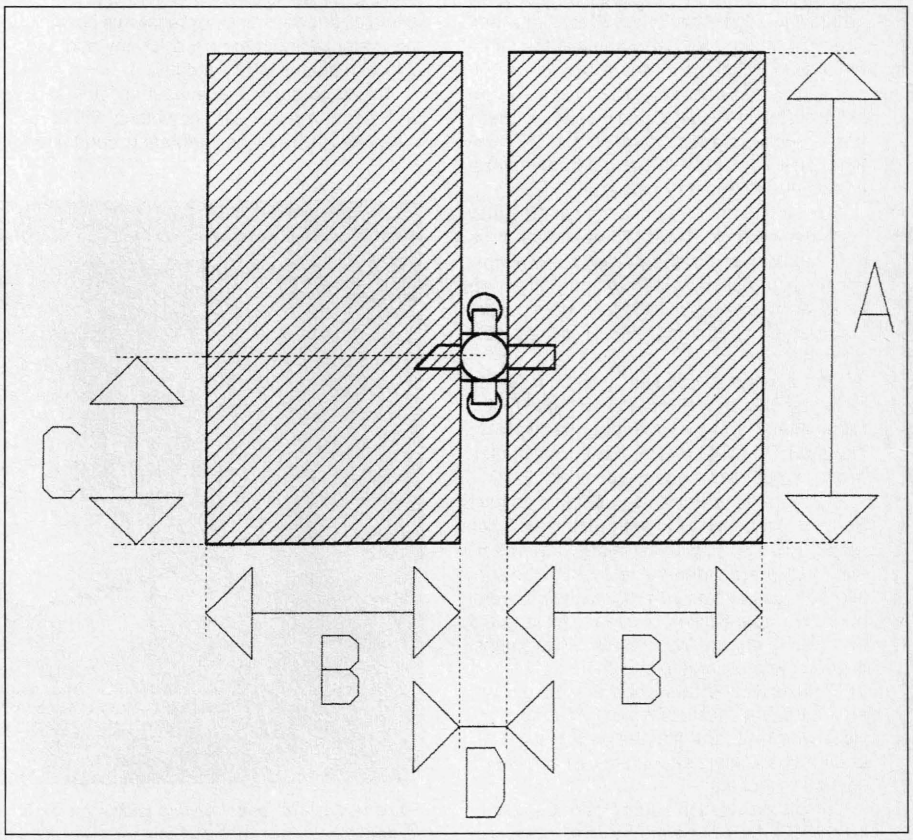

Figure 3. The oscillator circuit dimensions. (See text.)

World's Smallest 10 GHZ ATV Transmitter

Continued from page 16

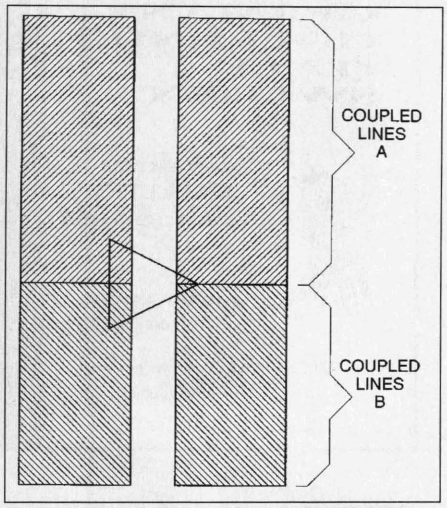

Figure 4. For PUFF, the oscillator is an amplifier with two pairs of coupled lines connected end-to-end. Various A and B lengths were tried, with the overall length A + B remaining λ/2.

reached. This is when radiation efficiency is at its best.

This principle is not new to us: Yagi antenna elements are also about λ/2 long (Figure 2) and they are particularly efficient when it comes to radiating energy from our transmitters! Radiation from microstrip elements is used in so-called *microstrip antennas*.

What we tried to do here was to combine the design of the previously mentioned oscillator with a microstrip antenna. Two microstrip antenna patches were designed close-coupled to each other. The GaAsFET input (gate) was connected to one, and the output (drain) to the other, thus obtaining the following design (Figure 3).

We decided to make both patches with the same dimensions for our first try. In fact, this is questionable, because if the two patches radiate with opposite phases, then their respective radiations would cancel each other!

Perhaps a more in-depth theoretical (and mathematical) approach would be needed here.

However, experimentation showed that some radiation did take place. In fact, some mutual cancellation from the two patches can be desirable if it is thought of as equivalent to limiting the output coupling of a conventional oscillator. If all possible energy is coupled out of an oscillator, its stability will be bad, because its characteristics will be affected by the circuit it is coupled to.

Designing the PCB

Now, there are four dimensions, A, B, C and D (Figure 3) we must decide.

We described the circuit to PUFF in the

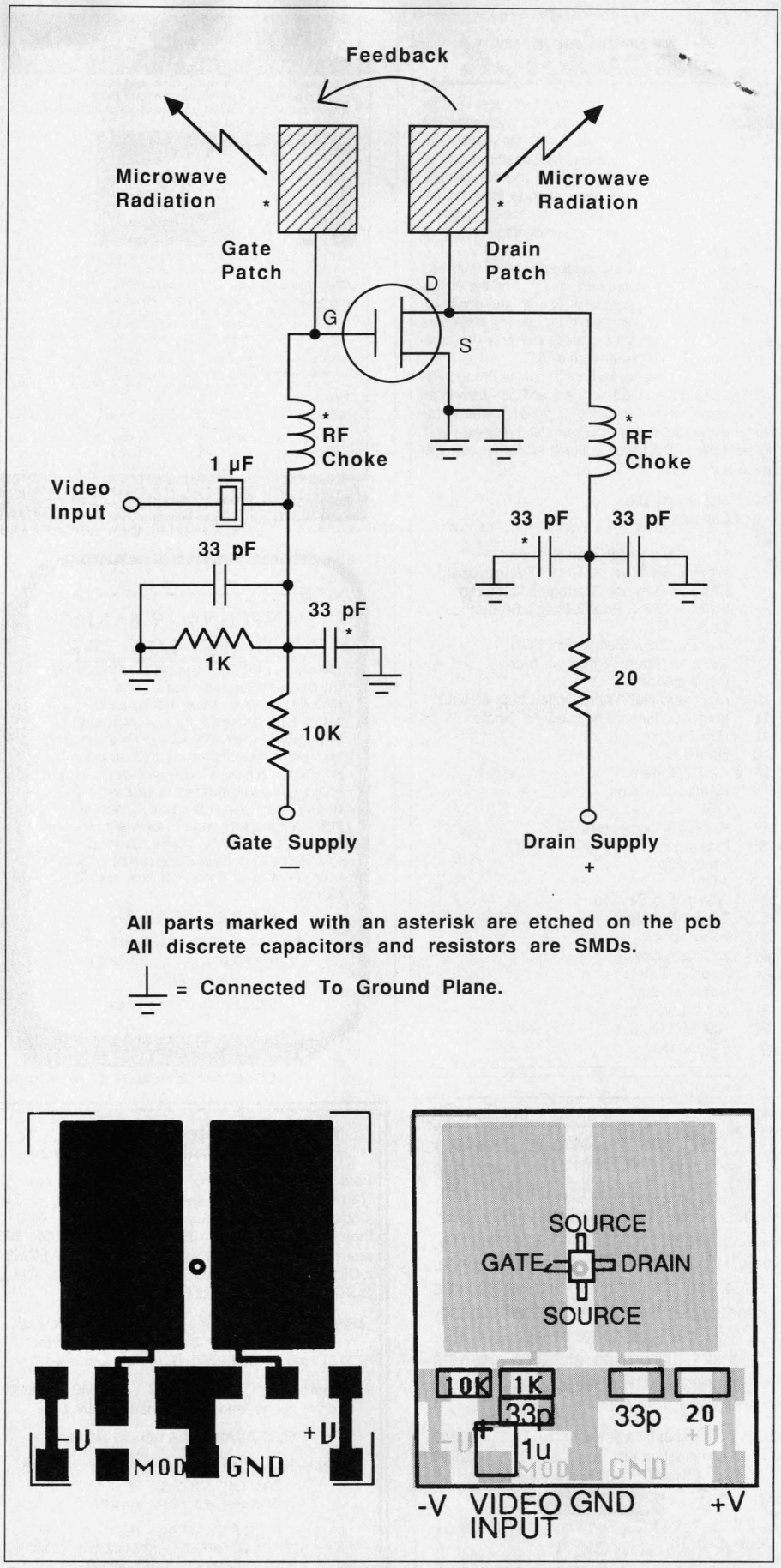

Figure 5. a) Circuit schematic. b) A drilled and etched double-sided PC board for this project is available for $5 plus $1.50 S&H per order from FAR Circuits, 18N640 Field Court, Dundee IL 60118.

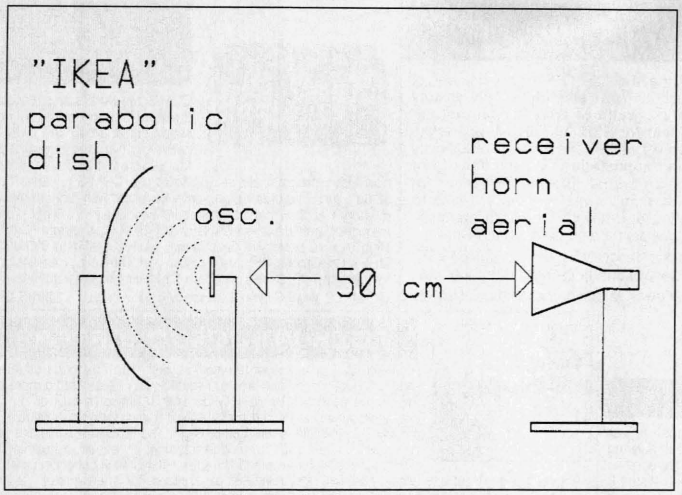

Figure 6. The test setup.

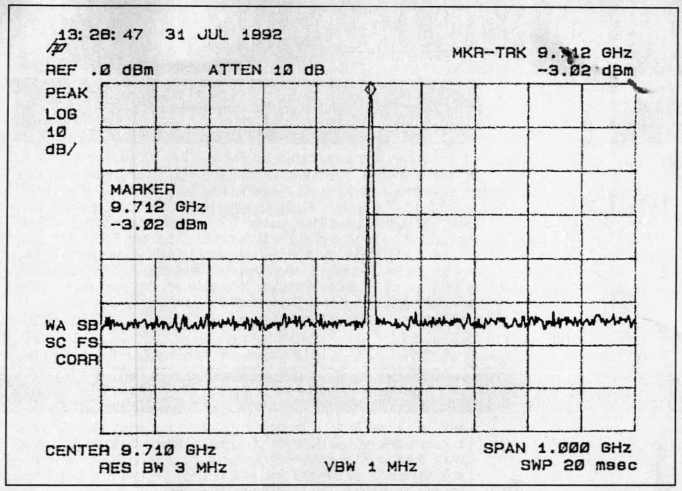

Figure 7. The signal at the receiver.

following way (Figure 4):

First, the coupled lines A and B were chosen with the same low impedance. Low impedance means that they are broad, like a microstrip antenna patch. Dimension B+D+B should be equivalent to about a half wavelength to maximize radiation.

Second, to generate enough feedback for oscillation to occur, they were chosen with tight coupling, which means close to each other. This determines dimension D.

Third, the overall electrical length of both lines put end to end (A) was chosen at about $\lambda/2$ to maximize radiation. The point at which the GaAsFET was attached to the two patches (dimension C) was searched with PUFF, by trial and error, so that S_{12} feedback was as high as possible.

Finally, we decided to start experimenting with the PCB pattern shown in Figure 5.

As an aerial we used an aluminum parabolic reflector, an "IKEA" dish, sold as a lamp, available cheaply in furniture shops. *[Editor's note: The authors' QTH is Switzerland. You may have to improvise if you cannot find the IKEA lamp locally.]* The diameter of this lamp dish is 40cm and its focal length is rather short, at about 11cm. So F/D is low, at 0.27. The oscillator was simply put at the focal point, so it would illuminate the dish . . . no more "penny feed." How is this for simplicity? (Figure 6).

The GaAsFET we used was a "Red Spot" from Birkett, 25, The Strait, Lincoln LN2 IJF, UK.

Dimensions D and B (Figure 3) were held constant throughout the tests: D = 0.5mm, B = 10mm.

Testing

For our first test, we took A = 18mm and C = 6.5mm. With +V supply = 4 V and -V supply = -3.5 V, Id was 23.4 mA and we received a -3 dBm signal with our horn antenna.

Oscillation frequency was lower than predicted at 9.712 GHz (Figure 7). The received signal was best with the oscillator being shifted away from the focal point, at 16.2cm instead of 11cm. This probably means that the radiation angle from the PCB is too narrow to illuminate the whole dish evenly (Figure 8).

Eventually, the GaAsFET failed (it did draw quite a lot of current) and was replaced by a first-class, expensive CFY 18-23 from Siemens. A was left unchanged at 18mm and C was tried at 7mm. The received signal was much lower, at -17.3 dBm. With C = 8.5, the oscillations stopped.

Most interesting was the fact that this small change in C brought the frequency almost 1 GHz higher at 10.653 GHz.

We replaced the CFY 18-23 with a new red-spot GaAsFET, with C left at 7mm and the frequency remained the same, so it really seems that the frequency shift comes from the C modification, rather than the GaAsFET change.

To lower the frequency down into the amateur band, we fitted two small pieces of copper foil to the ends of both patches, increasing the A dimension to 19mm. This brought the frequency to 10.293 GHz. +V supply was + 3.5V; -V supply was -4V; Id = 16.5 mA.

Figure 9 shows the received signal when the oscillator is frequency-modulated by sending a 4.5 MHz sinusoid to the gate. Linearity is acceptable.

Modifying the power supply voltage did not change the drain current much. Frequency did change but not linearly.

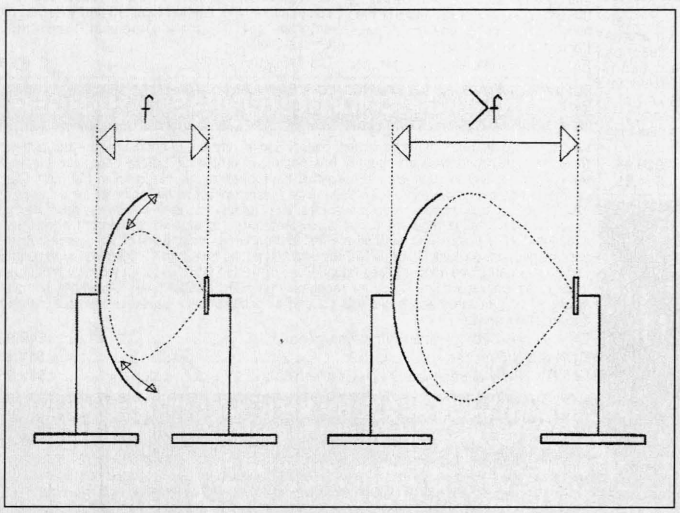

Figure 8. If the oscillator is placed further from the parabola than the focal length, it illuminates the dish more evenly.

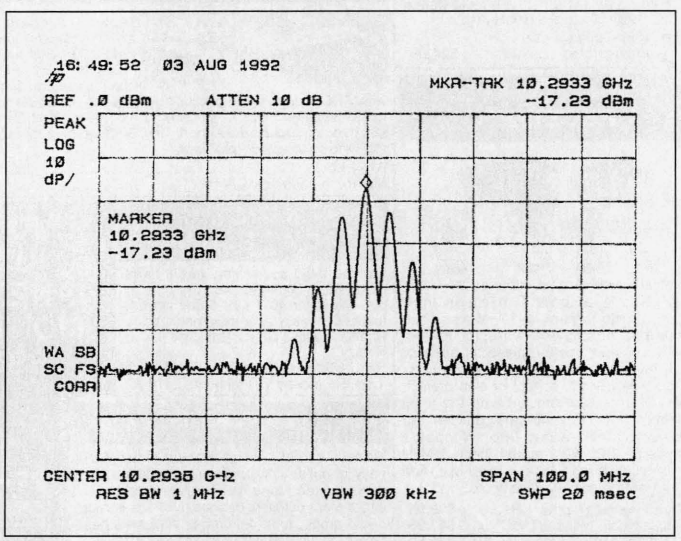

Figure 9. Output signal when the oscillator is frequency modulated.

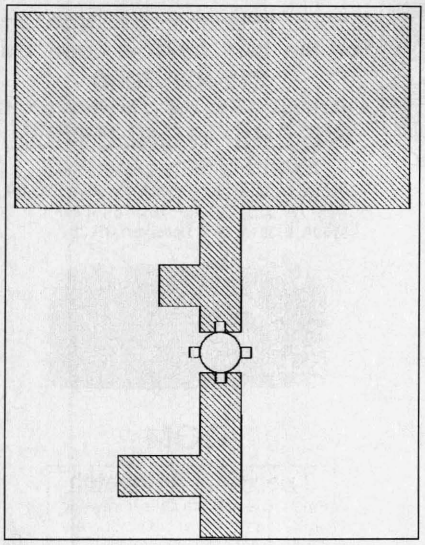

Figure 10. A preamplifier connected to a microstrip antenna.

+V Supply	-V Supply	ID	Frequency
+3.0V	-4V	15.5 mA	10.363 GHz
+3.5V	-4V	16.5 mA	10.354 GHz
+4.0V	-4V	17.5 mA	10.376 GHz

The received signal was best at -17.23 dBm when the PCB was set at 13.5cm from the dish. The cross-polarization attenuation was rather high, with a maximum of 30 dB.

The total radiated power was estimated at about 1 mW: Replacing the circuit under test with a Gunn transmitter of 1 mW known power output gave the same signal on our test bench.

We tried to further decrease C to 5mm. this sent the output power up about 3 dB and the drain current down to 11.4 mA. Oscillation frequency went down to 10.180 GHz, which allowed us to remove the two pieces of copper foil we had fitted to the patches' ends. This brought the frequency back up to 10.430 GHz.

We then discovered that the circuit was radiating both on 10 GHz and 5 GHz! We had not noticed this at first because the short length of waveguide between the horn antenna and the receiver was acting as a high-pass filter; (cutoff frequency of 1" X 1/2" waveguide is about 6.5 GHz). Further shortening the patches cured the problem.

Conclusion and Further Developments

Well, this is it: We have made a seven-component 10 GHz ATV transmitter, possibly a *Guinness Book* record! Stability was good, with little frequency shifts caused by moving objects near the TX. Although we did not try it, temperature stability could probably be enhanced by enclosing the transmitter between two plates of expanded polystyrene. This material has very small losses at 10 GHz. Another improvement could be fitting a dielectric stabilizer to the oscillator.

Simplicity is not the only advantage of building a transmitter of this kind. Having the 10 GHz source directly at the parabola's focus also avoids losses in waveguides, coaxial lines, transitions, relays and so on.

This would be particularly interesting in a receiver. The preamplifier could be built directly at the parabola's focus, the dish being illuminated by a small microstrip antenna attached next to the preamp (Figure 10).

As we know, any loss between the antenna and the preamp severely affects the receiver's noise factor. An assembly like the one shown in Figure 11b should be much less lossy than, say, the one in Figure 11a, and much cheaper, too, when you consider the price of an SMA connector or a microwave T/R relay.

One last word of caution: As for all GaAsFETs, it is highly advisable to turn on the negative gate supply slightly *before* the drain supply, because this keeps the drain current at a safe level. If the gate is left at ground voltage, a large current surge at turn-on could blow the GaAsFET. Microwave semiconductor chips are really tiny devices so their power safety margin is quite small. 73

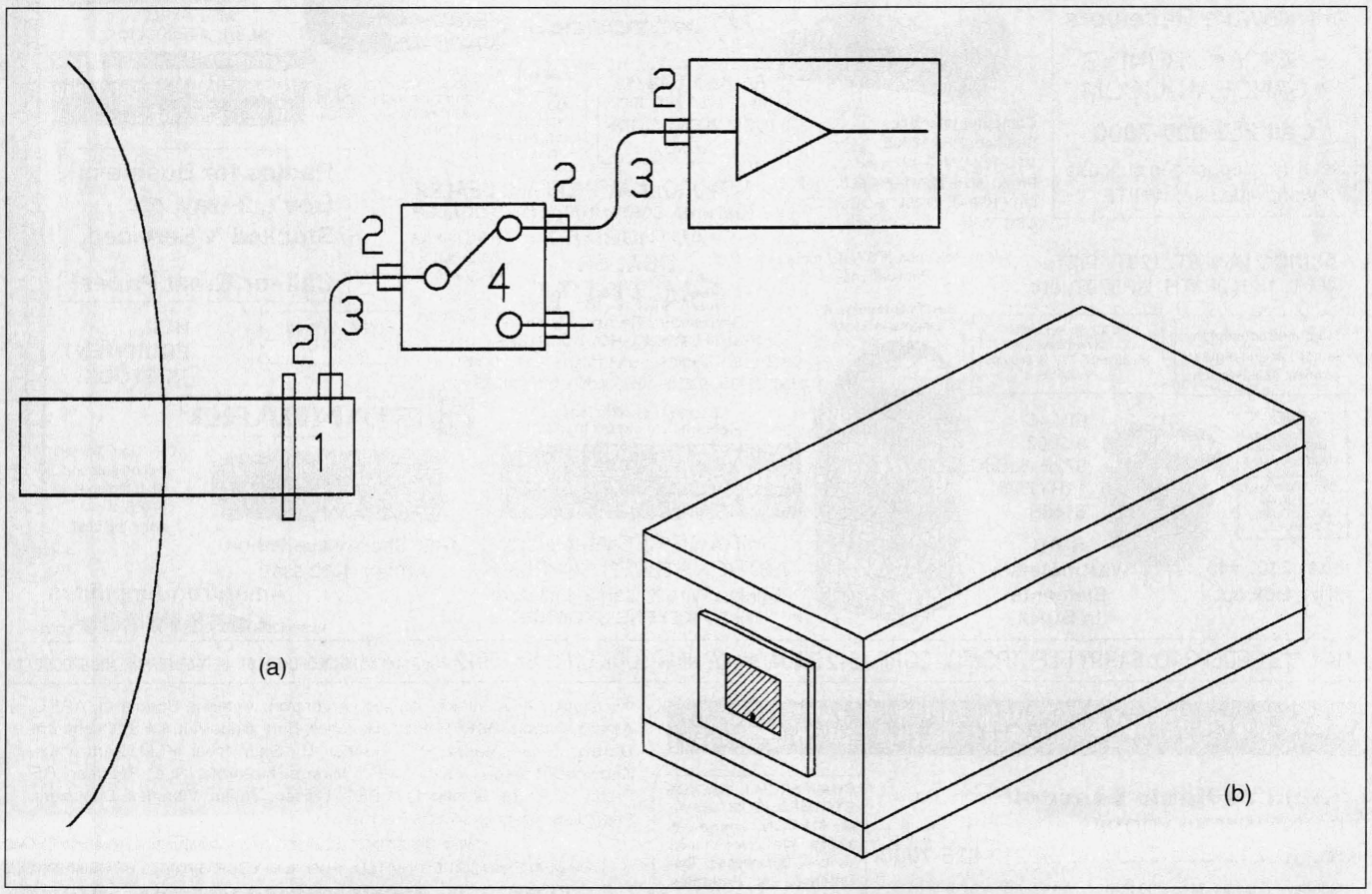

Figure 11. a) A more conventional (and lossy) setup. Note the 1) waveguide losses, 2) connector losses, 3) coax losses, and 4) relay losses. b) The preamp can be enclosed in its shielding box with a small microstrip element glued on the outside. The assembly is placed in front of the parabola with the microstrip patch at the focus.

ABOVE & BEYOND

VHF and Above Operation

C. L. Houghton WB6IGP
San Diego Microwave Group
6345 Badger Lake Ave.
San Diego CA 92119

Microwave Test Equipment

I am always asked the question, "Why is it that microwave test equipment is so expensive?" Well, most of it was made by manufacturers like Hewlett Packard, Anarden, Anritsu, California Microwave and Frequency West. The initial price tag was quite high as a Mil-Spec item, and this pricing carries over to the surplus arena. Do not despair—these items can be duplicated in an amateur workbench setting in a few cases. The difference between our home-constructed unit and the commercial unit is mainly calibration.

Inexpensive surplus microwave items can be found, but most of the surplus dealers try to push the $$$ amount as far as it will go. That's part of the American way—free enterprise. I have always tried to find things for little or nothing, but even with surplus electronics there is a basic value (for scrap) that you can't go below.

The same goes for the surplus dealer. I am told many times in my bargaining and haggling over the final negotiable price that *"You can't romance a junk man!"* Be that at as it may, these dealers seem to know when you are trying to look the part of "Joe Cool" and in reality are quite excited about some item you discovered. They seem to be able to see the sparkle in your eye and set the price accordingly. All you can do is wear sunglasses or become a good pokerface. Look for bargains and price them as to how they can benefit you without your having to redesign the entire chassis.

Don't pick up microwave odds and ends without some plan of how to use them. Just because it's a microwave item, don't go head-over-heels for it. Set the proper pace—first determine if the item will fit in with your plan of construction. Of course, if the item is better than any other thing you have, pick it up if the price is reasonable. This is especially true of good mixers/detector mounts, amplifiers and miniature microwave relays. Other items require some thought. Even I take some of this advice and as such do not have a collection of waveguide attenuators. They're nice, but I only need one in the test setup I am about to describe.

Microwave Signal Generator

There are quite a few simple pieces that work well when assembled and form useful microwave test equipment. The general appearance of these items is not top-notch (finished) but perform their function well, are dependable and the cost is minimal. The little generator that I will describe is quite simple and is just about as effective as some of the very large microwave test generators. Its components are a Gunn oscillator, a waveguide attenuator and a coaxial transition. N6IZW and I both use this style test generator on our workbenches to retune circuitry for 10 GHz. Both low power (preamplifiers) and high power (10 watt TWT) amplifiers have been tested with this setup. My old HP 10 GHz signal generator (klystron generator) now sits idle and serves as the support for a shelf in the shack.

This little Gunn oscillator is quite useful in bench alignment tasks. When you stop and think about the 75 lbs. and unstable operation of klystron signal generators, this little adjunct will prove quite attractive. The beauty of this arrangement is that almost any type of Gunn oscillator will work just fine. All you need is some means of connecting a variable attenuator and a transition to a coax connector. Power for the Gunn oscillator can be a battery or a regulated power supply; I generally use my bench-regulated power supply.

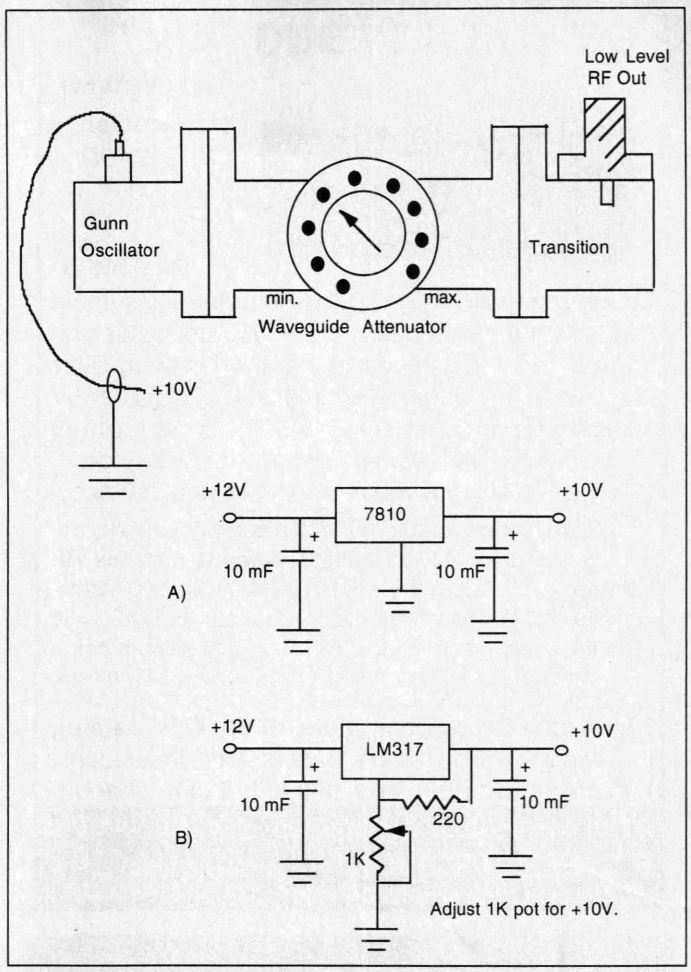

Figure 1. Microwave signal generator/Gunn oscillator power supplies: A) fixed voltage, B) variable.

The power supply is nothing more than a 9 or 10 volt regulated supply. See Figure 1 for power supply details. A fixed regulator could be used if 10 volts is all that is needed. Some readers might have a Gunn oscillator that requires a voltage of other than 10 volts and they can optimize their circuit with the adjustable LM-317 variable regulator circuit.

The heart of the generator is of course the Gunn oscillator, preferably a low power unit about 10 mW or less. Usually these oscillators use a waveguide flange and are equipped with a small horn antenna in burglar alarm systems. Our conversion is to remove the horn and attach a small waveguide variable attenuator in its place. The output of the attenuator is connected to a waveguide to coaxial transition. This connector on the transition will be our test generator output. Photo A shows my test generator—that's just how it was constructed many years ago. Variations in attenuator styles are not important; neither is their size. All that is required is that the attenuator be adjustable and have some means of calibration. A logging scale of some sort is quite acceptable. All you want is to be able to reduce power to a very small amount (maximum attenuation) and not overdrive small signal amplifiers with this arrangement.

Cost of components should not be over $20 for everything. The Gunn oscillator can possibly be scrounged from a burglar alarm company for little or nothing. Check supermarkets and shopping center maintenance shops for door openers that are defective. The Gunn oscillators usually survive; toss the other PC board circuitry away. Waveguide attenuators are a drag on the surplus market and as such don't command a high price. After all, it won't amplify and, other than being scrap brass, it doesn't have much to offer. Three or four dollars seems tops for a good attenuator and adjustable mechanism. You might have to purchase some older WWII radar test set to obtain all the parts. Look around at swap meets and be frugal.

The transition from waveguide to coaxial should not cost more than five dollars in surplus. If you can't locate one, construct one out of a coaxial

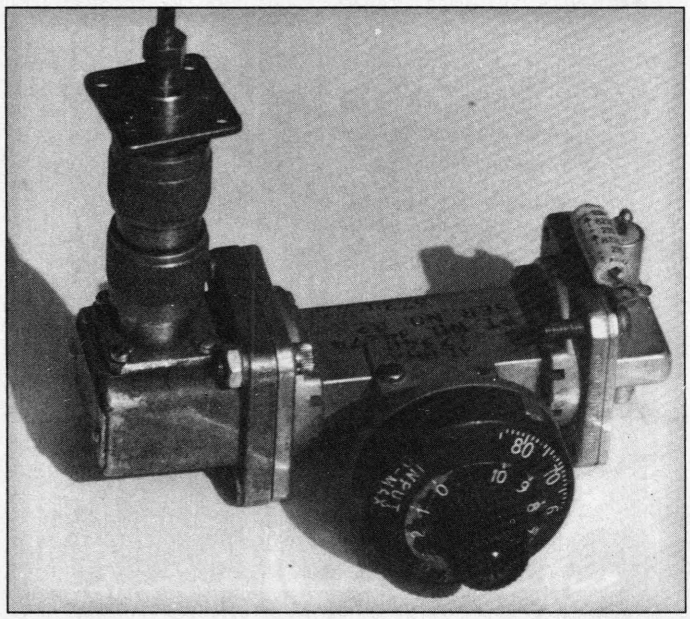

Photo A. WB6IGP's test generator.

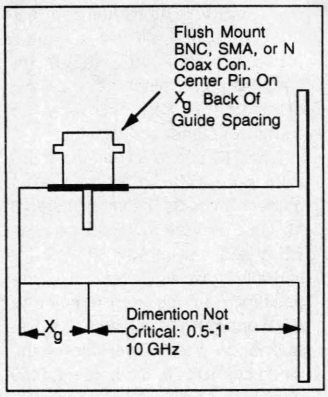

Figure 2. Waveguide transition. Xg = 1/4 guide wavelength at frequency. (10 GHz = 0.2")

connector and some scrap brass waveguide. Only an inch of waveguide (same size as the attenuator and Gunn waveguide flanges) is required. See Figure 2 for construction details; dimensions are not critical. Position the coaxial connector on top of the waveguide section with the rear of the connector shoulder just about at the end of the waveguide. Note where the center conductor is located on the top of the guide and drill a large hole to accommodate the connector sitting flush on top of the waveguide.

Drop in your "N" connector and solder to the top of the guide (other connectors are suitable). Place a brass plate on the rear of the waveguide to close off the end of the guide and solder it into place. We want this end of the waveguide to be closed off with the center connector of the coaxial connector spaced 1/4 wavelength from this rear wall, which is a shorted piece of waveguide (read or end of the guide). The front of the guide—the open section—is fitted with a small brass flange which is soldered into place over the end of the open waveguide. Keep solder out of the inside of the waveguide as much as possible as it's is very lossy at microwave frequencies. Finish off the front of the transition by making the waveguide Flange constructed "FLAT."

Don't use a file for other than rough finish of this section of waveguide. It is very important to have close tolerance waveguide sections butting up to each other without small cracks—the microwave RF will leak out of poorly-fitted flanges. To make the flange flat, place some medium sand or emery paper on a small piece of glass and rub the face of the flange on the emery-papered surface. In a very short time you'll see high and low spots that need further attention before it becomes flat. In no time at all it will look quite flat and somewhat polished. The Glass flat I use is 6" square and 1/4" thick. I used a thick piece of scrap so the small glass would not be very fragile. Back up the glass with a piece of wood or newspaper on a tabletop.

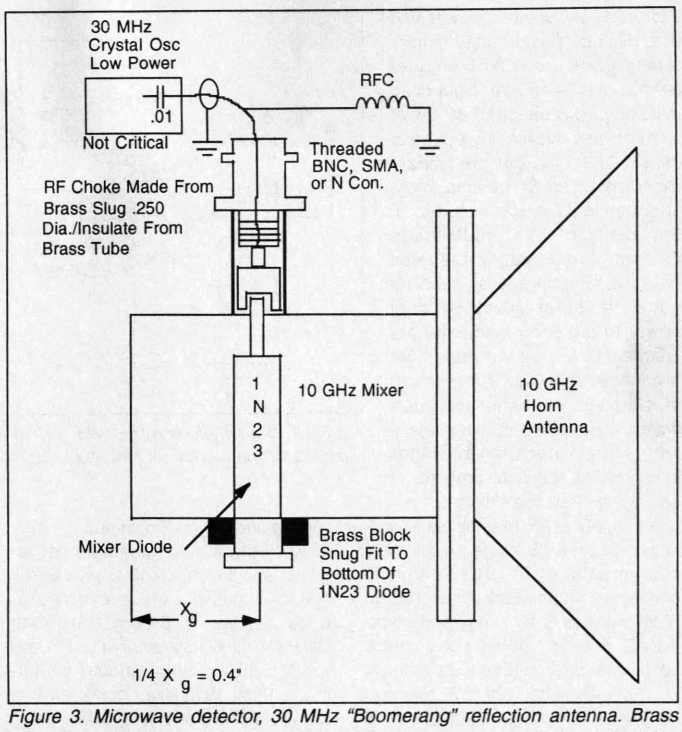

Figure 3. Microwave detector, 30 MHz "Boomerang" reflection antenna. Brass tube size to fit BNC, brass choke 0.259 long with hole to fit 1N23 diode with other end soldered to connector. Insulate with Scotch tape from brass tube, diode bottom grounded in brass block.

The Gunn oscillator and attenuator and transition are all bolted together, forming the test signal source. Set the

CAT-300 Repeater Controller

Attention Repeater Owners

*Finally a repeater controller with a TI voice synthesizer and full feature autopatch incredibly priced at **$299.00.***

Features Include:

- ✓ *Voice Synthesizer*
- ✓ *Twelve Voice Messages*
- ✓ *Two Voice Identifiers*
- ✓ *Full Feature Autopatch*
- ✓ *User Speed Dials*
- ✓ *DTMF Key Pad Test*
- ✓ *DTMF Repeater Access*
- ✓ *(56) Control Functions*
- ✓ *Remote Control Switches*
- ✓ *DVR Controller Ready **
- ✓ *(412) Word Vocabulary*
- ✓ *Female Voice & Sound Effects*
- ✓ *CW Identifier*
- ✓ *Reverse Autopatch*
- ✓ *Emergency Speed Dials*
- ✓ *Programmable Courtesy Tones*
- ✓ *DTMF Repeater Muting*
- ✓ *Programmable Codes and Timers*
- ✓ *Hardware Logic Inputs*

** (Requires MF-1000 Serial Interface Card $59.00)*

Write or Call for a brochure describing the CAT-300 Controller, including schematic, voice word list, and control functions.

CAT-300 Controller Board $299.00 Wired and Tested

Computer Automation Technology, Inc.
4631 N.W. 31st Avenue, Suite 142,
Fort Lauderdale, Florida 33309
(305) 978-6171

CIRCLE 268 ON READER SERVICE CARD

ID-8 Automatic Morse Station Identifier

Compatible with Commercial, Public Safety, and Amateur Radio applications. Uses include Repeater Identifiers, Base Station Identifiers, Beacons, CW Memory Keyers, etc. Great for F.C.C. ID Compliance.

- Miniature in size, 1.85"x 1.12"x 0.35".
- Totally RF immune.
- All connections made with microminiature plug and socket with color coded wires attached.
- CMOS microprocessor for low voltage, low current operation: 6 to 20 VDC unregulated at 6ma.
- Low distortion, low impedance, adjustable sinewave output: 0 to 4 volts peak to peak.
- Crystal controlled for high accuracy.
- Transmitter PTT output (to key transmitter while ID is being sent), is an open collector transistor that will handle 80 VDC at 300ma.
- Field programmable with SUPPLIED keyboard.
- Confirmation tone to indicate accepted parameter, plus tones to indicate programming error.
- All programming is stored in a non-volatile EEPROM which may be altered at any time.
- Message length over 200 characters long.
- Trigger ID with active high or low.
- Inhibit ID with active high or low. Will hold off ID until channel is clear of traffic.
- Generates repeater courtesy tone at end of user transmission if enabled.
- Double sided tape and mounting hardware supplied for quick mounting.
- Operating temperature range, −30 degrees C to +65 degrees C.
- Full one year warranty when returned to the factory for repair.
- Immediate one day delivery.

Programmable Features

- *Eight programmable, selectable, messages.*
- *CW speed from 1 to 99 WPM.*
- *ID interval timer from 1-99 minutes.*
- *ID hold off timer from 0-99 seconds.*
- *CW tone frequency from 100 hz to 3000 hz.*
- *Front porch delay interval from 0 to 9.9 seconds.*
- *CW or MCW operation.*

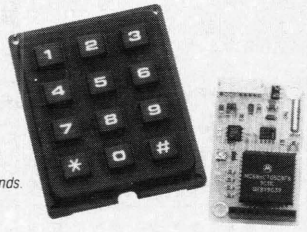

$89.95 each
programming keyboard included

COMMUNICATIONS SPECIALISTS, INC.
426 WEST TAFT AVENUE • ORANGE, CA 92665-4296
(714) 998-3021 • FAX (714) 974-3420
Entire U.S.A. (800) 854-0547 • FAX (800) 424-3420

CIRCLE 10 ON READER SERVICE CARD

attenuator to minimum power and determine attenuator range. For instance, if you are working on a receiver preamplifier you might need maximum attenuation of 40 dB or so to prevent overloading a preamplifier. Once you get preliminary alignment of an RF preamp, more attenuation might be in order. In the case of the multi-stage preamps (three-stage), they can have 26 dB gain and as such require the minus 40 dB of input power to provide meaningful adjustments. You cannot adjust an overloaded amplifier; it's all mush in this case. It's better to underdrive a preamp or amplifier stage in the preliminary adjustment stages to be able to see small amounts of gain as you tune the circuitry.

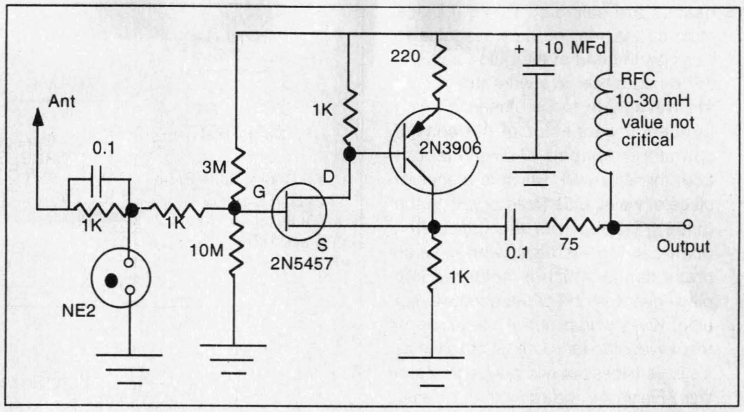

Figure 4. Schematic diagram VLF active antenna amplifier. Mount preamp at base of virtical antenna. Length of antenna is 10 to 20 feet.

Remember, RF preamplifiers work in the very low dB range on the input of a antenna. At 10 GHz (or any frequency for that matter) minus 105 dB is the equivalent to 1 microvolt sensitivity. Zero dB is 1 mW of power, and a 10 mW Gunn oscillator puts out +10 dB. For reference: 100 mW of power is +20 dB, 1 watt is +30 dB, and 10 watts is +40 dB. Set your attenuator accordingly to the test amplifier you are working with. I am working on retuning the Qualcomm 14 GHz 1 watt power amplifier a level of about minus 15 dB seems about right. (Amplifier boards are described in the June 1994 "Above and Beyond" column).

Normally, the 14 GHz amplifier requires about minus 5 dB to provide full 1 watt output, but when retuning, reduce the level to prevent saturating stages with RF. Stages that are in saturation do not show tuning adjustments at all. With lower power drive in the -18 dB or so range, small tuning increments are very apparent. This is one topic I will get into next month in detail, after you have had a chance to put the test generator together. Both Kerry N6IZW and I use this method on our workbenches to align or convert circuitry for amateur use.

Diode Detector Mount

Another simple test adjunct that can be put to use in the kit of tools for microwave circuitry is the diode detector mount. This single device can be used in quite a few applications, all very useful. You can make a field-strength meter or relative power meter, or a boomerang for wideband FM test alignment. The basic detector mount is a microwave diode (usually a 1N23) housed internal to a short transition-like holder that is fitted with a coaxial connector. Usually the coaxial connector on a detector is elevated somewhat from the waveguide to allow room for the diode connections. Figure 3 shows a typical diode detector. The small tower contains connections between the diode and an RF choke and the connector center connector.

The RF choke is nothing more than an insulated metal sleeve made from brass. Its impedance, at 10 GHz, is very low, making it an RF choke, but at say 30 MHz it's invisible, save for a few pF of capacitance. Its job is to remove 10 GHz energy and allow the IF frequency to pass. One side of the diode connects to the bottom of the choke and the coaxial connector center connector connects to the other side. The side walls are insulated with mylar or scotch tape. I have constructed detector mounts with copper pipe for the short tower section, drilling holes in the RF choke top and bottom to fit the top of the 1N23 and the coaxial connector center conductor. Adjust dimensions to allow the pin of the connector and the tip of the diode to make a good connection when all is held together.

Insulate the RF choke and make sure nothing shorts out the diode and RF choke connection. It's all above ground. The other side of the diode is grounded in a tight fit. Whether you purchase a detector mount or construct one, both should work well in these two applications. First, a simple

Amateur Software and Hardware for the Commodore User

ART-1

ART-1: A complete interface system for send and receive on CW, RTTY (Baudot & ASCII) and AMTOR, for use with the Commodore 64/128 computer. Operating program on disk included. **$199.00**

AIR-1: A complete interface system for send and receive on CW, RTTY (Baudot & ASCII) and AMTOR, for use with Commodore VIC-20. Operating program in ROM. **$99.95**

AIR-1

SWL

SWL: A receive only cartridge for CW, RTTY (Baudot & ASCII) for use with Commodore 64/128. Operating program in ROM. **$69.95**

AIRDISK: An AIR-1 type operating program for use with your interface hardware. Both VIC-20 and C64/128 programs on one disk. **$39.95**

AIR-ROM: Cartridge version of AIRDISK for C64/128 only. **$59.95**

AIRDISK

MORSE COACH

MORSE COACH: A complete teaching and testing program for learning the Morse code in a cartridge.
For C64 or C128. **$49.95**
VEC SPECIAL **$39.95**

G AND G ELECTRONICS
OF MARYLAND

8524 DAKOTA DRIVE, GAITHERSBURG, MD 20877
(301) 258-7373

VISA MasterCard

CIRCLE 169 ON READER SERVICE CARD

4 PORT REPEATER AND LINK CONTROLLER

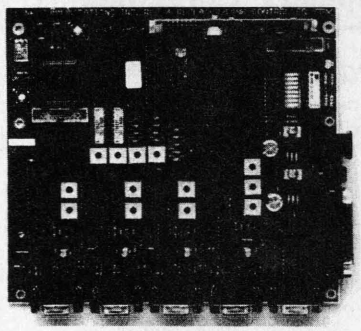

FEATURES:

- 4-full duplex radio ports
- Optional Autopatch available
- Unique CW for each port
- DTMF control from any port
- 100 user command macros
- 300-9600 baud serial port
- 4-Layer board construction
- Priced for any groups budget

RLC-4 REPEATER CONTROLLER

Benefits:

With DTMF and serial programming features, your controller is more secure from unwanted access. Use only 1 controller at your site to control up to 4 separate repeaters/links with their own personalities and features intact. Make emergency autopatch calls with the telephone option. Only the RLC-4 can make these features available at such a low price.

ONLY $375.00

LC

Link Communication, Inc.
115 2nd Ave. N.E., Sidney, MT 59270
Call for informaion about our complete line of controllers
(406) 482-7515 (Voice) (800) 610-4085 (Orders) (406) 482-7547 (Fax)

CIRCLE 47 ON READER SERVICE CARD

detector can be constructed by placing a microamp meter from the detector output to ground. It will respond to incoming RF and give you a simple test of relative RF. For increased sensitivity, connect a single-stage amplifier for more sensitive meter indications.

A single 3130 op amp will do the job. See Figure 4 for schematic details for the amplifier stage. Construction is not critical and can be dead-bug style on the back of your meter to keep the size small. I placed mine in a small metal box to prevent stray interference, and mounted the detector on the output flange of a waveguide frequency meter. I use this setup to calibrate 10 GHz wideband FM Gunn oscillators to proper frequency.

The Boomerang

The detector mount can also be utilized to construct a reflection signal test set. It's been called the "boomerang," and in function it does just that. It reflects a microwave signal back to the source of radiation, but not like a mirror: It will translate your frequency back to your receive frequency. This assumes you are using a 30 MHz IF. If you use other frequencies, change the crystal oscillator to suit your IF frequency.

A boomerang is nothing more than a detector mount at the microwave frequency, to which is coupled a source equal to your IF frequency. In this case, using a 30 MHz IF, a simple 30 MHz TTL-type crystal-can oscillator, will work just fine. High power on the oscillator is not necessary. A feed directly from the oscillator coupled with a 0.01 µF capacitor will work well. Tie the detector diode to ground return with a 30 MHz type RFC. The value is not critical.

What happens is that when you aim your 10 GHz wideband FM transceiver at the boomerang it detects your incoming RF and mixes it with the 30 MHz oscillator, generating a difference frequency, and reflects that mixed frequency back towards your receiver. If your receiver is sensitive enough and you have not placed the boomerang too far away, the receiver will detect it. As you make sensitivity adjustments in the receiver or antenna system you will see a higher return signal for your efforts. A single station can use the boomerang for system sensitivity evaluation or antenna aiming tests.

Update: VLF Active Antenna

At present, several simple schematics have surfaced concerning active antennas to be used in the 100 kHz range. Figure 4 shows the simplest type—an FET input to match the very high impedance of a short wire or whip antenna at 100 kHz. The FET is connected in a Darlington configuration with a small-signal PNP transistor. The circuit is set up not for a lot of gain but rather for impedance matching of the very high impedance whip antenna.

A 100 kHz antenna with a feed impedance close to 50 ohms would be 1/4 wavelength long. At 100 kHz you would need a weather balloon to loft that piece of wire. As the length is shortened the impedance increases, and with a very short piece of wire the impedance is very high, requiring matching. The neon bulb, an NE-2, is in the circuit to short the input with high RF input surges like lightning, to protect the amplifier.

Construction is not critical. For best performance, the amplifier should be mounted at the base of the antenna, being powered from the Loran receiver, which feeds 9 volts DC up the RF coax. An alternate antenna for a quick test is a 20-foot vertical wire or whip tied directly to the receiver. It works for a quick test if signals are strong. This is by no means the last word, but a report on one version of a active antenna for VLF use.

You might want to know why coils are absent from this design. Well, with LORAN pulse operation, any tuned circuit not broadbanded enough would impair the pulse nature of LORAN signals. In other words, a sharp filter-like circuit would cause the receiver to be inoperative.

Well, that's it for this month. In the January issue I plan to describe switching-type power supplies used to power numerous circuits requiring voltages greater than 12 volts. Circuitry will be discussed that will allow you to operate 15 to 24 volts of any polarity from a negative grounded 12 volt battery. As always, I will answer questions concerning this and other related subjects. Please send an SASE for prompt response. 73 Chuck WB6IGP.

INSURANCE
Computer & Radio Equipment

HAMSURE coverage follows your equipment wherever you take it. Theft from vehicles, earthquake, water damage and all other hazards including surges. Insure all your equipment and accessories (except towers and antennas but including rotors), media and purchased software.

Low Premium *Low Deductible*

HAMSURE
7901 Laguna Lane
Orland Park, IL 60462

800-443-6242 Weekdays **800 - 988-7702** Evenings & Weekends

Great Circle Bearings Included

CIRCLE 78 ON READER SERVICE CARD

Handheld Repeater Controller

Spectrum Electronic Products introduces the world's first handheld repeater controller. No larger than most handheld radios, the **HRC-10** converts a single or dual-band radio into a full featured simplex or duplex repeater system. Key features of the **HRC-10** include voice IDer, DTMF Control and programming, hang and time-out timers, Digital Voice Operated Squelch (DVOS™), telemetry tones, and private voice mail slot.

Phone 408-438-2788
FAX 408-438-6027
$299

CIRCLE 69 ON READER SERVICE CARD

Do you use a
JURASSIC REPEATER
then fast forward to **1994**

- Add A Digital Voice Messaging System To Your Repeater
- Leave Voice Messages For Each Other
- Get Packet Cluster Info In Voice
- Schedule Voice Announcements
- Computer Board And Software $259

Call Toll Free For Info Package

1-800-563-5351	Toll Free From USA
1-306-781-4451	Direct
1-306-781-2008	Fax
1-306-781-2070	BBS

DIGITAL Communications Inc.,
P.O. Box 293, White City, SK, Canada SØG 5BØ

CIRCLE 181 ON READER SERVICE CARD

30-300 MHZ RECEIVER

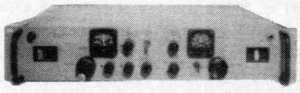

R-1283/GRC RECEIVER covers VHF in bands 30-90 and 90-300 MHz AM-FM-CW-Pulse continuously tunable; 21.4 MHz IF. Selectable bandwidths 67 or 300 KHz and 3 MHz. Solid-state; with tuning and level meters, BFO, AGC, video output and N connections. Requires 115 V 60 Hz; 3.5x19x17, 30 lbs sh.
Used-reparable **$145.00**

COLLINS 30S1 POWER AMP, 1 KW PEP manually tuned for KWM-2A. Uses 4CX1000A/8168 tube (not included). "Winged" label; 200 lbs sh.
Used-not tested **$900.00**

Prices F.O.B. Lima, O.• VISA, MASTERCARD Accepted.
Allow for Shipping • Write for latest Catalog
Address Dept. 73 • Phone 419/227-6573 • Fax 419/227-1313

FAIR RADIO SALES
1016 E. EUREKA • Box 1105 • LIMA, OHIO • 45802

CIRCLE 75 ON READER SERVICE CARD

Say You Saw It In
73 Amateur Radio Today

BATTERIES

Nickel-Cadmium, Alkaline, Lithium, Sealed Lead Acid For Radios, Computers, Etc. And All Portable Equipment

YOU NEED BATTERIES?
WE'VE GOT BATTERIES!

CALL US FOR **FREE** CATALOG

E.H.YOST & CO.
7344 TETIVA RD.
SAUK CITY, WI 53583
(608) 643-3194
FAX 608-643-4439

CIRCLE 114 ON READER SERVICE CARD

VECTOR FINDER

ZERO-IN THE SIGNAL!

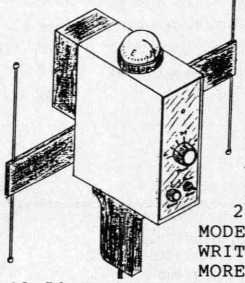

HAND-HELD PHASE SENSE ANTENNAS FOR VHF DIRECTION FINDING. USES ANY FM XCVR. COMPASS GIVES DIRECTION. ARMS FOLD FOR STORAGE. TYPE VF-142 COVERS BOTH 2-MTRS & 220MHZ. OTHER MODELS AVAILABLE. WRITE OR CALL FOR MORE INFO.

$3.50 SHIPPING & CA. ADD TAX) TYPE VF-142 $139.95 619-565-1319

RADIO ENGINEERS
3941 MT. BRUNDAGE AVE.
SAN DIEGO CA.92111

CIRCLE 58 ON READER SERVICE CARD

ABOVE & BEYOND

VHF and Above Operation

C. L. Houghton WB6IGP
San Diego Microwave Group
6345 Badger Lake Ave
San Diego CA 92119

Silk-screening a microwave antenna

The next antenna area to explore, and where I put most of my efforts, is in the construction of antennas for the frequencies of 1296 and above. In this region you can carry the antenna or antenna feed in your lunch sack—that is, with the exception of the microwave dish reflector. As you know, when the frequency is increased further and further, an antenna's size is reduced by the same proportions. The advantage is that GHz-type antennas are very small and can be built on top of a magazine cover.

The dish mechanism that the feed illuminates with RF is the device that provides the actual gain by focusing the RF radiated power into a beam, much like the reflector of a flashlight. The bulb by itself is bright, certainly, but then the reflector (dish) focuses the bulb's energy into a high intensity beam instead of scattering it in all directions. Very high gain in the 35-dB range can be achieved with relatively simple dish antenna sizes of three feet or so.

For instance, a dish, or more commonly, parabolic antenna, can be fed at many different frequencies. A large coffee can will function at 1296 MHz, while a smaller-diameter one will function at 2304 MHz. As frequency increases, so do the dimensions needed for a feed structure. Of course, as we go higher and higher, feeds get smaller and the need for more exacting measurements in the construction of these devices needs to be addressed. Using a coffee-can type of antenna feed is sometimes passed over in favor of newer designs, but the coffee can still will do a very good job.

You feed a coffee can by means of a probe connected to a type "N" coax connector spaced 1/4 wavelength from the rear of the can. This will be the transmitting probe. A second probe can be attached 90 degrees offset from the first probe and used for receiving. The coupling between probes so offset is minimum (with a typical coupling loss of 30 dB between them), providing very good isolation. This type of design was very popular in the early days of microwave, and in some cases is still used today. One name given to this type of feed is a Polaplexer, a sort of twist on the names polarization and duplexing or mixing signals together.

Today, much more efficient designs for the same frequency regions can be simply constructed by home fabrication techniques. The best of all worlds came together when I saw, for the first time, a triband feed constructed on a relatively inexpensive substrate glass epoxy FR-4 printed circuit board.

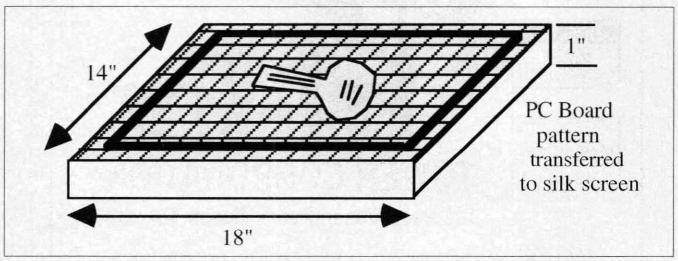

Fig. 1. A typical silk-screen showing a home-made wooden frame made from 1- by 2-inch pine. Black line is window screen tubing to hold fine-mesh silk-screen material in cut in bottom of wood. Make screen taut like a GI bunk. Screen material is actually nylon with 306 mesh threads per inch. The original process used silk, hence the name.

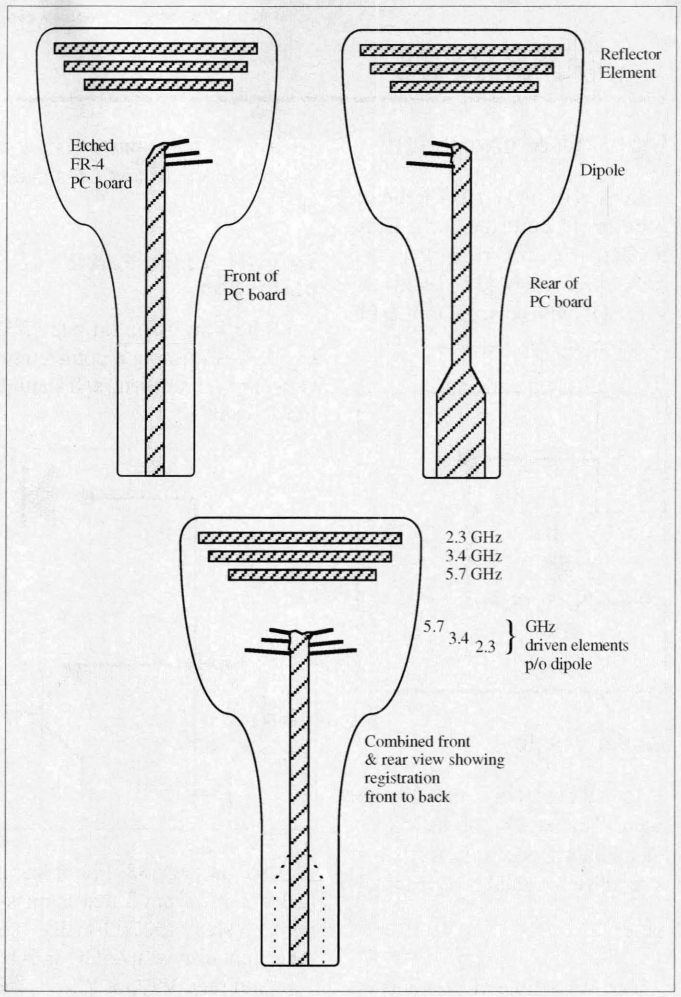

Fig. 2. Diagram of WA3RMX triband feed showing the rear and front sides of the PC board. Double-sided PC board is required, with an exact registration between both sides. Solder rear side wide trace to shell of RF connector, narrow trace to center pin. Scale artwork is available in The ARRL UHF/Microwave Projects Manual.

This three-band feed design with artwork for the PC board layout was published in both *The ARRL UHF/Microwave Projects Manual* and in the August 1990 issue of *QST*. I came across it while reviewing an article I authored with Kerry N6IZW in the same projects manual.

The antenna was designed by Tom Hill WA3RMX. Basically, this simple feed is quite clever in that a single piece of double-sided .062 copperclad circuit board (FR-4) contains a small, very efficient, low-power, three-band parabolic dish feed. The frequencies that this feed covers are the 2304 MHz, 3456 MHz and 5760 MHz amateur bands.

This feed had to be tried out by our microwave group to assist an ambitious project that called for the construction of a new microwave frequency band transceiver converter in time for testing at our monthly club meetings. Our intent was to construct as many different frequency converters as possible for communications on different amateur bands.

We had many rigs constructed on the 10-GHz amateur band, so we wanted to promote interest in the 1296 to 5760 MHz bands as well. I covered my 1296-MHz rig's construction in a recent past column and showed its versatile conversion scheme using the 1152-MHz local oscillator both for conversion and as a harmonic generator for markers at our higher frequency bands. The rigs constructed for 2304, 3456 and 5760 MHz had one common fault, and that was what to use for the antenna feed. This PC board design by Tom Hill could not have presented itself at a better time.

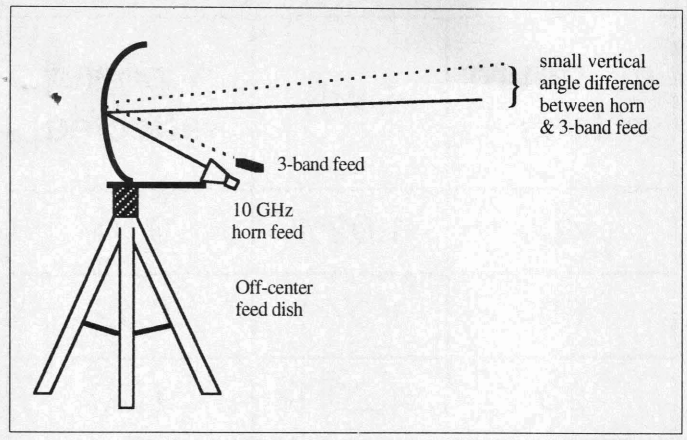

Fig. 3. *Drawing of triband feed mounted on my off-center-feed dish with 10-GHz horn feed attached. The WA3RMX triband feed is held in place with a length of RG-141 semi-rigid solid copper jacket microwave coax. The RG-141 coax is bent and formed to position the 3-band feed just above the 10-GHz horn at the focus point. Slight vertical realignment is necessary to align either the horn or the tri-band feed. No repositioning is required in horizontal position.*

The beauty of the PC board feed was that it could be employed on our standard dishes at the same time as our 10-GHz feed, and be positioned just above it—sort of out of the standard pattern. This arrangement allowed rapid frequency hopping with converters to operate on different bands. Once the dish antenna was properly pointed on one frequency, only minor changes in pointing angle needed to be addressed as we only had to change out the electronic packages (converters), keeping the dish on the same exact pointing angle to the distant station.

This made multiband operation very easy and quite enjoyable. We left all the 10-GHz equipment hot and connected, and just tilted the vertical angle to allow the 3-band feed (which was slightly higher than the 10-GHz one) to be properly aimed at the distant station. Because the 3-band feed was higher, we had to lower the front axis of the dish point angle for this feed, to lower than what was used for 10 GHz. It's just like watching a pool ball on a pool table bounce off the cushion. If the starting angle is higher than the first attempt, so will the course of the second ball be higher. It's the same with microwave dish antennas and pointing angles. See **Fig. 3** for a graphic depiction of this pointing angle difference between the 10-GHz feed and the three-band feed.

As mentioned, construction details for this feed were graciously provided in *The ARRL UHF/Microwave Projects Manual*. I wanted to use the silk-screen process because I was familiar with it and have material on hand to reproduce PC boards to near photo tolerances. I had tried the technique on a 10-GHz amplifier with success and wanted to see how my double-sided PC board construction skills would hold up, since most of my construction to date had been with single-sided PC board projects.

Silk-screening is relatively easy, but very fine lines stand the chance of losing detail since the mesh or screen has threads of .001-inch diameter. The artwork adheres to the screen just after its development in hydrogen peroxide, where it resembles a soft, Jello™-like substance on a Mylar™ backing. After development and washing in a stream of aerated, bubbling, mildly warm water, the pattern to be transferred to the screen is made clear while still in a somewhat jellyish liquefied state. It is this soft material that embeds itself into the screen, to make a tough surface once dried, allowing ink (resist) to be squiggled through the patterns of whatever you are making. The ink dries and the etching of remaining unprotected copper begins.

The finished process is the completed PC board. Of course, I forgot to tell you that you have to repeat the process on each side of the PC board to make a mirror image in the exact, or nearly exact, position (registration) from front to back. You will know you are okay if, when you hold the etched PC board up to the light, you see through the PC board and observe a symmetrical pattern (registration) between the front and rear sides.

The first step in making any artwork, be it for the photographic or silk-screen process, is to obtain a high-quality negative or positive of the original artwork to exact dimensions. The camera that I use is over 90 years old and weighs some 60 pounds. It's an antique but still functions well. The camera uses a slide plate film holder to which a sheet of film up to eight by 10 inches can be held in position, or a smaller piece of film can be taped in place. To focus this large-format camera, a frosted piece of glass in a holder is inserted in the back of the camera, and the lens opened.

You can see the object on the frosted glass and adjust magnification or reduction and focus manually. Final verification as to exact size is made by observing an IC socket, holding up a new IC, and comparing its pins to the film plane view. Using the IC like a micrometer for vernier, observe the exact placement of the first pin, and carefully check the last pin in a row for any error. This is a simple method for exact size requirements in your manual setup. For an object such as the three-band antenna, you have to rely on a vernier caliper to measure exact distances and allow a "fudge" factor for the silk-screen process.

I used a slight fudge factor, increasing dimensions about .003 to .005 inch to account for

The New QRP Plus

A Quality Transceiver for the Serious Low Power Operator

Completely Re-engineered!

- An all new receiver design incorporating a custom mixer from Synergy Microwave Corp. for strong signal performance and dynamic range to compete with the best full size transceivers
- RF speech processing and improved ALC circuit add effectiveness to SSB transmit.
- New wide range, smooth acting AGC circuit is free from overload.
- I.F. noise limiting reduces interference without adding distortion or compromising performance
- General coverage receiver tunes from 1.8MHz to 30MHz SSB & CW
- All band transmit 160-10M SSB & CW
- Improved full break in CW and built in iambic keyer
- SCAF filters, Variable bandwidth from 100Hz to 2400Hz. No ringing even at 100Hz setting
- Very low power drain - 180Ma @ 12V means full weekend of operating on small battery
- 20 memories, SPLIT, RIT

Custom designed mixer from Synergy Microwave Corp. is the heart of a new high performance receiver.

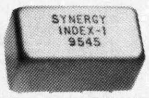

Designed & Built in the U.S.A

$695

MasterCard VISA

INDEX LABORATORIES • (206) 851-5725 - Fax: 851-8385
9318 Randall Dr. NW, Gig Harbor, WA 98332

processing with silk-screen reproduction of transferring etch resist inks to copper PC board. The screen material I used has about 300 threads to the inch (making them about .001 inch in diameter), so I doubled the thread dimensions as a fudge factor, giving some allowances for the fine antenna elements. I further doubled this screen factor to account for some undercutting of the PC board fine traces during board etching. See **Fig. 2** for an outline of the antenna pattern. For exact dimensions, get a copy of *The ARRL UHF/Microwave Projects Manual* and see the original artwork.

Why go through all this hassle to make a PC board using the silk-screen process? Well, there are several reasons, number one being that it is inexpensive and can be done at home easily. True, it does require some photographic capabilities, but that is true in any board process. The main reason is that once a screen is imprinted with a pattern of your current PC board project, you can squeegee inks onto a PC board (one side) as fast as you can count to five. Then, to make a pattern on a second side, you wait until the ink is dry, set up registration marks to verify that both sides of the board are in alignment, and screen off the second side. Both sides should be in alignment within 15 to 20 thousandths of an inch to function well.

I would not set up an individual amateur to do silk-screening to make one PC board. It is more suited for club projects where many boards are needed. To serve the club needs and be able to construct quite a few boards at one time for a current project is just one way to keep a group interested in new and interesting projects to aid their operation and goals.

Silk-screening is a great method for these club projects as it is very inexpensive. Materials for silk-screening can be stored for very long times and are not date-dependent. The film used to transfer an image onto a screen costs $25 for a lifetime supply, and can be used in normal indoor lighting. Just do not expose it to direct sunlight as it is very sensitive to UV light.

dB return loss	SWR	% power reflected
40	1.02:1	0.01
30	1.07:1	0.12
20	1.20:1	1.00
15	1.45:1	3.00

***Table 1**. Return loss vs. SWR and reflected power.*

"It's just like watching a pool ball bounce off the cushion."

Normal exposure is sunlight contact printing for one minute. This film is developed in hydrogen peroxide and water (50¢ a pint in any drug or grocery store). The resist ink costs about $10 a quart and will last several years. The process is such that the transfer film is water soluble, while the inks are petroleum-based, requiring petroleum solvent (like paint thinner).

Now that I have gone through the entire process to construct a PC board antenna that can fit in my pocket, the project is just starting to get interesting. The next step was to test and determine how well we did. Will the antenna feed perform at all three frequencies or did we just spend a lot of time constructing something not usable? Well, whether you call us lucky or technically competent, I don't know—but testing showed a very usable antenna feed.

Kerry N6IZW was able to run a return loss test over the frequency span of 600 MHz to 6,000 MHz in one continuous swept test. See **Fig. 4** for the frequency sweep chart, showing very good results at our three frequencies of interest.

By the way, a good return loss measurement is just the same as saying a good SWR is present at a point of interest. Look at return loss as saying at a specific frequency the (device) is absorbing nearly all RF power and is returning very little RF power back to the source. While return loss is expressed as a dB value, SWR is expressed as a ratio between forward and reflected power.

The relationship between a low return loss dB value and a poor SWR is identical. See **Table 1** for a few relationships between the measurements.

The performance obtained from the triband feed was very good and showed a raw return loss of 23 dB at 2304 MHz, 30 dB at 3456 MHz, and 17 dB at 5760 MHz. The exact minimum return loss was in all cases a little high in frequency, although quite usable as is. While we missed the mark (high) by a small amount, this proved to be a very lucky break for us. The original antenna feed was tested "raw"—that is, without a protective coat of polyethylene or similar material to stop the copper from being affected by the wind, rain and such. When the finished antenna was sprayed with a protective coat of resin, the total effect was a dielectric loading of the elements and lowering of the resonant frequency a few percent, making all frequencies better placed on the slope of the return loss curve. Was this a case of three wrongs make a right? I'll never tell, but just call me lucky from now on.

In actual use suspended by the rigid RG-141 solid coax, my antenna proved to function very well. Changing to a different transverter band only required undoing the main DC power cable and the antenna coax as well as the IF coax, and connecting them back to the new frequency unit for minimum effort to change bands rapidly for any QSO party.

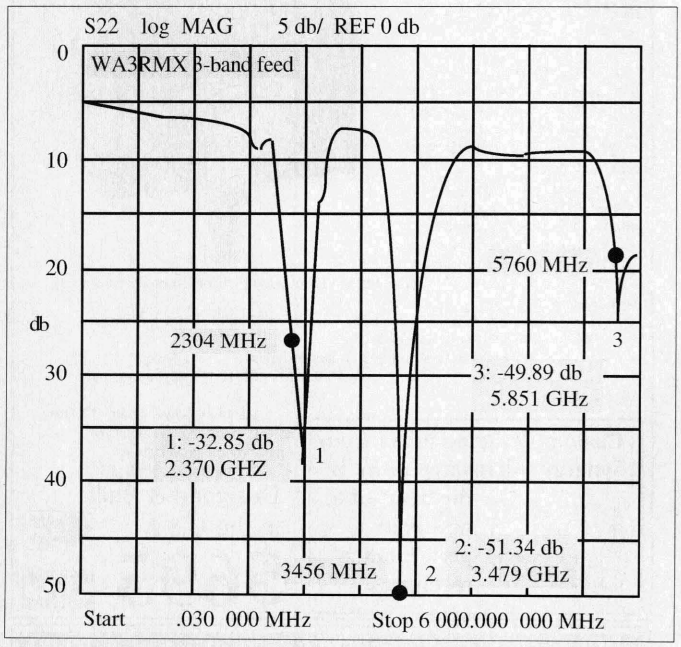

***Fig. 4**. Return loss curve obtained on silk-screened 3-band feed before dielectric loading.*

Number 45 on your Feedback card

ICOM IC-R100 Communications Receiver

It may look like a scanner, but it is a serious communications receiver with scanning capability.

Breckinridge S. Smith K4CHE
104 Brookfield Drive
Dover DE 19901

I like scanners, but my wife is obsessed with them. She has two in place on the kitchen table, one to monitor the community and another one to keep track of the police departments and my ham activity. It's a regular scanner world in our kitchen. The last time the President visited the nearby Air Force Base, our kitchen sounded like a military command post.

I searched all of the advertisements for a small receiver/scanner with good sensitivity, a VFO, and an S-meter. These specifications were needed for my foxhunting sessions using Doppler systems and conventional directional finding antennas.

I had a lot of trouble getting some of the manufacturers to fess up on their sensitivity specifications but ICOM specs were clearly stated in their spec sheet. So I ordered the unit and received a small (5.9 inches wide, 2.0 inches high and 7.1 inches deep) unit that conformed to my specifications, as well as featured a built-in 20 dB attenuator and a preamp. Throw in the wide 500 kHz to 1800 MHz coverage and you have quite a unit. Yes that's correct, that's 500 kHz, which is down below the AM broadcast band, up to 1.8 GHz, which is in never-never land. Now *that's* coverage. The standard receiver coverage is continuous and covers all the amateur bands including HF, VHF, UHF up through 1296 MHz. The unit, as supplied, does not cover 800 to 900 MHz—there is a special law enforcement receiver that can be ordered by authorized agencies that covers 800 MHz.

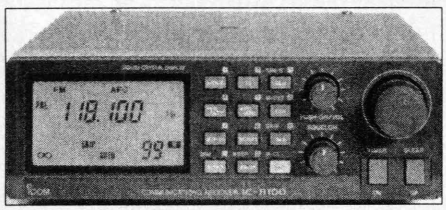

Photo A. *The ICOM IC-R100.*

I unpacked the unit in the kitchen while my wife eyed it from across the room. Was she thinking of a third unit to add to her inventory? She doesn't know about the predicted frequency move of our local agencies from VHF to the higher frequencies—I know *your* area agencies have already moved from the lower bands to 800 MHz or higher, but I must remind you that I live in the technical black hole of the East Coast—Delaware.

Initial examination

The first thing you notice is the 3.1-pound weight; the unit feels hefty. The entire enclosure is steel, not plastic, and on the rear are three antenna connectors. Remember, I told you that this is a serious receiver. Two N connectors for the 50.0 to 905 and the 905 to 1800 MHz range: You need two antennas for these ranges. The third connector is an SO-239 and is for the lower frequencies of 0.5 to 49 MHz. The antennas

From Micro Computer Concepts
RC-1000 REPEATER CONTROLLER
• Autopatch • Reverse Autopatch
• User Programmable CW ID, Control & User Codes & Timeouts
Manual with schematics • 90-Day Warranty
Wired & Tested w/ manual $199.95
VISA MasterCard
Micro Computer Concepts
8849 Gum Tree Ave.
New Port Richey, FL 34653
813-376-6575
CIRCLE 160 ON READER SERVICE CARD

TNT Today's No-Tune Multiband Antenna
No pruning. No tuning. No knobs to twist.
TNT is No-Tune on 80 cw, 40, 20, 17, 12, 10. TNT/2 is No-tune on 40, 20, 10. Work other bands w/ tuner. DX &Gain rise w/ frequency.
Ready to Use Includes isolation balun & 99 ft RG8x
Kink-Proof Wx-Sealed Low Noise
No Traps or Resistors Insulated to 3000 V Rated 500 Watts
The modern coax-fed version of the classic off-center fed windom.
TNT Windom $89.95 +$8 135 ft. long P&H
TNT/2 Windom $79.95 +$7 67 ft. long P&H
Technote 126--$6.95 ppd
AntennasWest
Box 500622, Provo, UT 84605
Order Hotline 800-926-7373
CIRCLE 135 ON READER SERVICE CARD

EVERY ISSUE OF
73 Amateur Radio Today on Microfiche!
The entire run of 73 from October 1960 through last year is available.
You can have access to the treasures of 73 without several hundred pounds of bulky back issues. Our 24x fiche have 98 pages each and will fit in a card file on your desk.
We offer a battery operated hand held viewer for $75, and a desk model for $260. Libraries have these readers.
The collection of over 600 microfiche, is available as an entire set, (no partial sets) for $285 plus $5 shipping (USA). Annual updates available for $10.
Satisfaction guaranteed or money back!
BUCKMASTER
6196 Jefferson Highway
Mineral, Virginia 23117
540:894-5777·800:282-5628
Internet: info@buck.com
VISA Fax 540:894-9141 MasterCard
CIRCLE 168 ON READER SERVICE CARD

supplied were a small telescoping whip with an N connector, and a short portable longwire HF antenna. After further examination of the rear panel I found the standard 2.1 mm power plug. The center pin is positive (don't you hate it when they make the center pin negative?), and a quick check of the service manual tells me that the unit has reverse polarity protection via a diode. There's an internal speaker mounted on the bottom, but the unit has an external speaker jack which utilizes a 3.5 mm plug. In addition there is an antenna select jack which uses a 3.5 mm stereo plug. The rear panel also sports an LCD contrast pot and a clock display option switch. The data plate is riveted to the chassis. The power cord is fused on both sides (don't buy equipment that is not fused on both lines—I can tell you some horror stories!). ICOM provides a chassis-mounted metal cable clamp to keep the power cord secure. The mounting bracket supplied is rugged and secures the unit with four screws.

The biggest item on the front panel is the large 2- by 1-inch LCD display. There is a no-nonsense dimmer button that is easy to activate. The keys on the keyboard are covered with that magic rubber and the function labels are printed on the rubber. The actual key numbers are printed on the front panel. Key activation is signaled by a beep (which can be disabled). The squelch and volume knobs are much smaller than the large VFO/channel knob, which is normal-sized. Below the VFO knob are two push-buttons which are labeled timer and sleep. At first, I thought "What a waste of panel space," but these buttons are also labeled DN and UP and allow you to change the frequency or channels up and down if you get tired of the large VFO knob.

Sensitivity and frequency coverage

My first bench check was for sensitivity. If the unit doesn't pass, it goes back. On two meters the specs called for 0.2 µV using 12 dB SINAD. I measured 0.1 µV without the preamp. The squelch opened at .07! This was without the preamp on; turning on the preamp on two meters did not really improve the 12 dB SINAD sensitivity, but the S-meter indicated an increase in signal strength. The sensitivity passes and the unit stays. My Doppler systems and other DF gadgets on my communications van are going to be very happy with this receiver! Further sensitivity checks on 220, 440, 906, and 1296 all beat the specs, but the preamp has to be on for the higher UHF frequencies—above approximately 500 MHz—to meet the specs. On its spec sheet, ICOM clearly states that the preamp must be on to meet specs between 50.0 and 905 MHz. The preamp is not available above 905 MHz, and you have a slight rise in the 12 dB SINAD specification level from 0.2 µV to 0.32 µV on FM which results in the receiver sensitivity being slightly reduced. I spot-checked the FM sensitivity at 1550 and 1750 MHz and found it to be better than the specification of 0.32 µV.

"Remember, I told you that this is a* serious *receiver."

Unit operation

Setting in a basic frequency and mode was simple, but you have to be careful with the selection of the mode. It's easy to confuse the wide FM with the narrow FM. Wide FM would be used on the FM broadcast band or in the audio portion of TV broadcasting, but not on two meters. It took only a moment to program the channels, but the best part is that you can erase the channels completely without resetting the central processor. I was eager to try out the VFO and found that the tuning step range of the VFO was easy to change. The selectable steps are 25, 20, 12.5, 10, 9, 8, 5 and down to 1 kHz. I was looking forward to the 1 kHz steps, which are needed for foxhunting when the fox sometimes shifts, either accidentally or on purpose, off frequency in small increments. The mode and step setting are programmable with the channel frequency and it's easy to select a channel and then tune up or down in small frequency steps from the channel that is selected. The first week that I had the unit I drove around town tracking down cable TV leaks for DF practice. With the IC-R100's VFO it was a snap. During my tour of the city I drove through several of our intermod alleys and found the receiver to be reasonably immune to overload as compared to the other (cheaper) scanner mounted in the vehicle.

More receiver features

The attenuator is selectable with a push-button and provides approximately 20 dB of attenuation. This is very useful near strong broadcast stations, repeaters, and when closing in on the fox during a hunt. This feature is available only on the 50 MHz to 905 MHz range.

The AFC (Automatic Frequency Control) tracked very nicely. I set the unit on the bench and slowly moved the signal generator away from the frequency and the unit tracked it. Perfect for that foxbox or balloon transmitter that drifts in frequency, due to low batteries or extreme temperature change.

The antenna selector jack is located on the rear panel. The instruction book was vague on this function but the purpose of this jack is to provide a high or a low voltage logic signal depending on the frequency that is being covered. This logic signal will be used for activating other antenna selectors remotely. The instruction manual didn't include a table of voltages but it was easy to figure out.

The unit has a clock which can be displayed on the front panel if desired and you can program the unit for various timing functions. Available are power on, power off, or a memory select timer. You can have a once-only timer, a daily timer, a sleep timer—the list goes on. The clock has a backup battery specified to last one and a half years, and it's fairly easy to access the clock battery, as it is located on the main board, near the rear of the receiver. The central processing unit also has a battery that has a predicted life of five years and ICOM recommends that the receiver be serviced for this battery change as the battery is buried in the logic board area.

The S indicator is a bar graph with seven easy-to-read segments. It is a relative signal strength indicator, and is not calibrated in S units. During the factory alignment, the S indicator is set at a specific signal level in the 80 MHz range. A three-segment signal indication on VHF is not the same as a three-segment signal on UHF—I found that for three segments, on two meters it took 1.5 µV, and on UHF it took a much stronger 7 µV volt signal.

I took a break from the test bench and put a wire antenna on the HF antenna port.

Tuning down across the 40-meter AM broadcast band was a treat! I had forgotten about the hundreds of stations broadcasting from all over the world. A quick check on 40-meter SSB and CW produced signals with the receiver, but they were hard to interpret as the unit does not have a BFO or product detector. Tuning across the AM section of 75 meters produced several good signals. Checking the time and frequency standard, WWV produced strong signals in the 10 and 15 MHz range. While mobile, I used the ANL, automatic noise limiter, on WWV, and found it to be effective with pulse-type noise.

Back to the bench

The ultimate test of a scanner: The Birdie Search. The search is conducted without an antenna for signals that are produced by internal mixing of various oscillators and IF circuits inside the receiver. Nothing is worse than band-scanning and having your unit lock up on one of these internally generated signals. My first problem: How do I check the receiver from 500 kHz up to 1800 MHz? That's a lot of knob twisting. What I did was program the unit to search small frequency segments at a time, and to stop and resume scanning. I activated the Auto Memory Write Scan mode; this way the receiver would search itself and write any detected birdies into channels 80 through 99. I went back later to check the results. I did find a few, but very few—one well below two meters on 141.2 MHz and other significant signals at 105.9, 176.5 and 211.8 MHz, but not enough to worry about. There were no birdies in the amateur bands; this unit is very clean and passes the birdie test. The auto memory write mode worked very well and is great for searching with an antenna for those secret frequencies out there.

800 to 900 MHz is locked out of the receiver. Now, I know that some of you want to know about the possibility of modification, to receive this range for monitoring local government agencies. Since I do two-way radio service work on the local trunking channels, I needed the extended coverage to monitor our systems. I modified the unit using one of those modification books that are available at hamfests. The modification wasn't easy and involved a complicated disassembly of the unit to be able to find the correct area of the logic board. Once you find this area you have to remove several surface-mount components surgically. The modification is definitely not a clip-the-diode or jumper type of operation.

The instruction manual is well written and provides several quick reference sections. A schematic of the unit is not included. ICOM promptly sent me a service manual for review; it was well organized and included all the schematics. During my review of the service manual I stumbled across this "Danger" statement: *"Do not apply an RF signal of more than 100 mW (that's one tenth of one watt) to the antenna connector. This could cause damage to the receiver front end."*

With the IC-R100's VFO, tracking down cable TV leaks was a snap."

I did some field strength calculations but was not sure of the near-field formulas so I tested my scanner receiver antenna mounted in my van. It was very easy to induce a 100 mW signal into my scanner antenna from a nearby 50-watt quarter-wave antenna. Most of my power levels on my vehicle are in the 10- to 25-watt range so I was fairly safe. My advice is to mount your scanner antenna as far as possible from any transmitting antenna—this is good advice for *any* two-way installation. Separate those antennas!

Overall

It's obvious that I like this receiver. My only complaint is that the unit has too many features crammed into the little steel box—but all the features work, and the unit surpasses its published specifications. I have used the unit extensively for my two-way radio service work and for my foxhunting obsession. I don't think that you will be able to find another small mobile receiver that has the frequency coverage, a VFO capable of 1 kHz increments, and a preamp and attenuator built-in.

MSRP for the blocked version of the IC-R100 is $960. For further information, contact ICOM America at 206-450-6088 or your nearest ICOM dealer. 73

Handheld Repeater Controller

Spectrum Electronic Products introduces the world's first handheld repeater controller. No larger than most handheld radios, the **HRC-10** converts a single or dual-band radio into a full featured simplex or duplex repeater system. Key features of the **HRC-10** include voice IDer, DTMF Control and programming, hang and time-out timers, Digital Voice Operated Squelch (DVOS™), telemetry tones, and private voice mail slot. **$299**

http://www.spectrum-usa.com
800-566-2788 - fax 408-336-9461

CIRCLE 69 ON READER SERVICE CARD

ISOTRON ANTENNAS FROM 160-10 METERS

NO TUNERS
NO RADIALS
NO COMPROMISE
PRICES START AT $49.95

SEVEN EXCELLENT REVIEWS
JUST DON'T HAPPEN BY CHANCE
CALL US FOR A FREE CATALOGUE

See review in 73, Oct. 1984; 73, Sept. 1985; 73, March 1986
CQ, Dec. 1988; W.R., Mar. 1991; 73, Nov. 1994; 73, Apr. 1996

ASK ABOUT OUR NEW ISOTRON 160C!

BILAL COMPANY
137 MANCHESTER DRIVE
FLORISSANT, COLORADO 80816
(719) 687-0650

CIRCLE 42 ON READER SERVICE CARD

Next Day

QSLs
Two-Color
Rainbow Assortment

Baraboo, Wisconsin
Sauk County
K9ZZ

Info $1

Antennas West
(801) 373-8425

Call Today &

We Ship	Next Day	2nd Day	ASAP
100	$29.95	$24.95	$19.95
200	$39.95	$34.95	$29.95
400	$49.95	$44.95	$39.95
500	$54.95	$49.95	$44.95
1000	$99.95	$89.95	$79.95

All orders ppd 2nd day air/ priority mail.
For overnight air delivery add $10.
Box 50062-S, Provo, UT 84605

CIRCLE 5 ON READER SERVICE CARD

FREE CONSTRUCTOR'S CATALOG!

RF Shielded Steel Boxes

MODEL	W x D x H in.	A*	B**
SB-1	2.1 x 1.9 x 1.0	4.65	5.50
SB-2	3.3 x 1.9 x 1.0	6.25	7.50
SB-3	4.2 x 1.9 x 1.0	9.50	11.25
SB-4	6.3 x 1.9 x 1.0	11.00	12.50
SB-5	3.3 x 2.7 x 1.1	9.75	11.50
SB-6	4.8 x 2.7 x 1.1	12.00	14.25
SB-7	6.4 x 2.7 x 1.1	13.75	16.25
SB-8	2.6 x 2.7 x .63	7.25	8.75
SB-9	3.2 x 2.7 x .63	8.50	10.00
SB-10	4.8 x 2.7 x .63	9.25	11.00
SB-11	6.3 x 2.7 x .63	11.25	13.25
FEED-THRU CAPACITORS			
FTS-1	1000pF/50VDC SOLDER	.88	.95
FTSI-1	1000pF/50VDC SCREW-IN	3.60	3.75

HOT TIN-PLATED STEEL BOXES WITH DIVIDERS. ELIMINATE SPILLOVER OF UNWANTED SIGNALS! FEED-THRU CAPACITORS, TOO!
*MUST MENTION AD FOR DISCOUNT

ORDER TODAY! ($30.00 MINIMUM ORDER)
PRICES INCLUDE WORLDWIDE SHIPPING!
*A = Cont. U.S., CANADA & MEXICO; **B = Rest of WORLD

ORDERS 800-634-3457 ■ FAX 800-551-2749
OFFICE 702-565-3400 ■ FAX 702-565-4828
SESCOM, INC. 2100 WARD DR., HENDERSON, NV 89015
SESCOM, INC. is not responsible for inadvertent typographical errors and prices and specifications are subject to change without notice.

CIRCLE 167 ON READER SERVICE CARD

Joe Moell P.E. KØOV
P. O. Box 2508
Fullerton CA 92837
[Homingin@aol.com]
[http://www.homingin.com]

Secrets of the RDF Whirligig

America's Cup sailors always want faster boats. NASCAR drivers always want faster cars. Fighter pilots always want faster planes. Their goal is to win the race or the dogfight, and it takes the fastest and most "user-friendly" equipment to do that. The same is true in hidden transmitter hunting, which we hams call T-hunting or foxhunting.

Everyone knows that the fastest mobile T-hunting setups use Doppler units, right? Well, sometimes. On the plus side, a Doppler takes bearings hundreds of times every second and displays them instantly, even on very short signal bursts. VHF/UHF Doppler installations are inconspicuous, easy to use, have no moving parts, and interface readily with a computerized mapping and navigation system.

I use my mobile Doppler on two meter T-hunts when it's the right tool. But sometimes it isn't. A Doppler outputs a single bearing indication for each rotation of its array, no matter how many direct and reflected signal components are present. So in an area of high signal reflections (multipath), the display often bounces around aimlessly.

T-hunters here in southern California and elsewhere prefer rotating gain antennas such as beams and quads in these situations. Their receiver S-meter shows the azimuth of each incoming signal peak. That makes it easier to determine (or should I say guess?) which one is direct and which others are reflected. A beam setup is more sensitive than a Doppler, giving greater range. It works better on horizontally polarized signals, too.

Some T-hunters have taken the idea of separating the direct and reflected signals a step further by making polar plotters to show signal amplitude versus direction on a cathode-ray tube (CRT) or computer screen. The operator "eyeball averages" the fluctuations resulting from vehicle motion. A large repeatable lobe identifies the most likely direct bearing to the T. Reflections and noise in other directions show up as a jumble of noncorrelated traces after several rotations of the mast. If two or more keyed-down transmitters in different directions are on the frequency simultaneously (such as a jammer and the station being jammed), a polar display can resolve bearings for each of them. Try that with a Doppler!

One more plus for polar displays: The multiple overlaid sweeps on a CRT will give accurate bearings of single-sideband stations and pulsed noise sources. Dopplers, on the other hand, can't do this because they require carrier-type signals. They aren't designed to track emissions with large amplitude variations.

For good eyeball averaging, the CRT must display several rotations or sweeps of the RDF antenna at a time. An ordinary oscilloscope won't do. You need a storage-type oscilloscope or a high-persistence CRT like the ones in radar sets of the pre-computer era.

Notes from Nottingham

Last month, I began describing the polar plotting system used by Dave Bullock G6UWO and John Wood GØPSI. They have a motorized 5-element J-beam atop their sedan. A shaft encoder (**Photo A**) and digital logic generates beam azimuth data in sine and cosine form. When combined with S-meter values from the receiver, the CRT display shows incoming signal level in all directions simultaneously. As they drive the roads around Nottingham, England, Dave and John use the flickering lobes of the display to determine which is the most likely

Continued on page 44

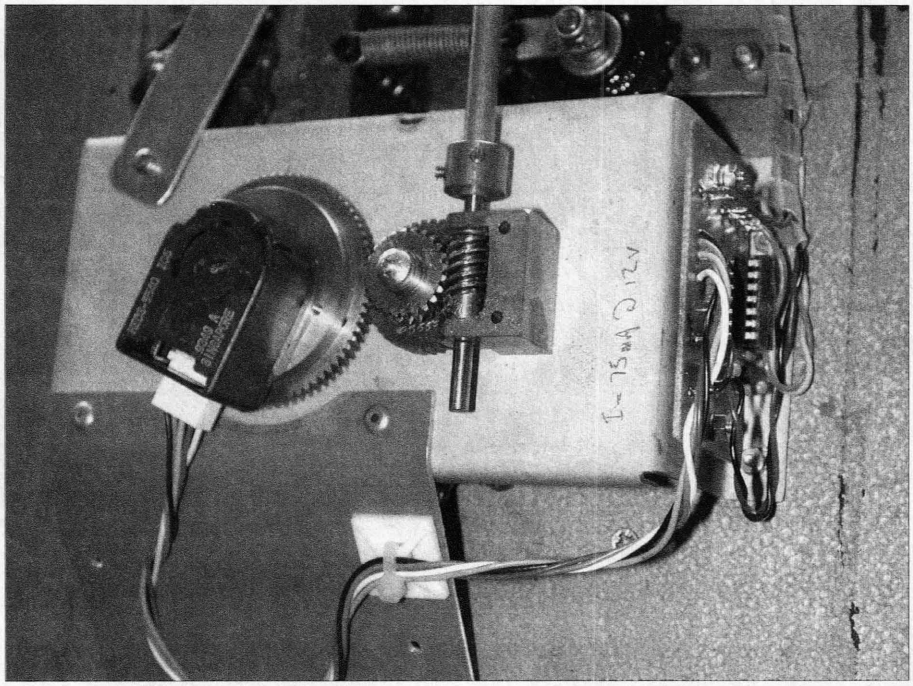

Photo A. *The Hewlett-Packard shaft encoder and gearing system provides azimuth data. (Photo by Dave Bullock G6UWO)*

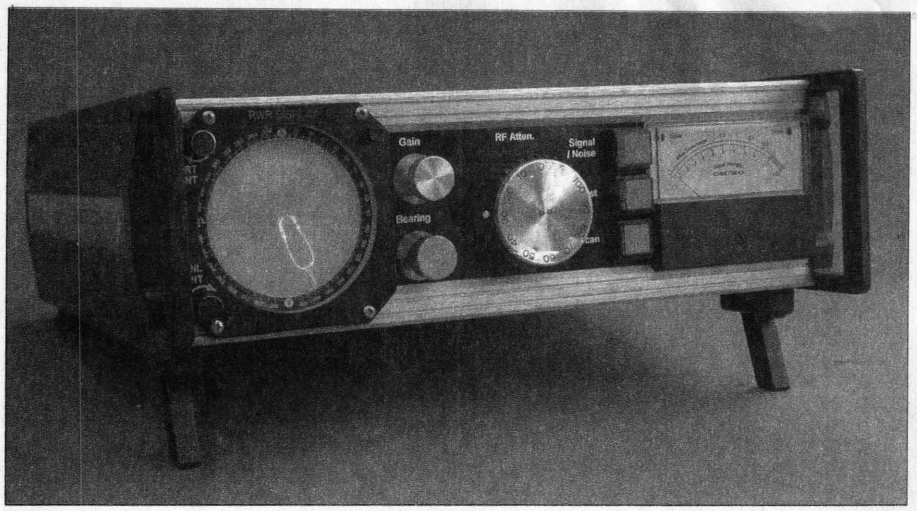

Photo B. *Dave and John's final unit (for now) is in a recycled instrument case that fits easily on the dashboard. (Photo by Dave Bullock G6UWO)*

Homing In

continued from page 43

signal source direction and which other lobes represent multipath.

"Having hunted with the system for two full years now, I can report that it is almost unbeatable when pitched against both Dopplers and normal manually turned beams," Dave says proudly. The primary indication of signal strength comes from the S-meter output of G6UWO's Pye M2000 receiver. This set is unusual because its meter circuit output changes about one volt for each 20 dB change in signal strength. This gives the system a very wide dynamic range.

"We get a good indication of signal direction from a rock-crushing 6 feet away from the transmitter to an extremely weak signal in the noise," Dave continues. "We also developed a noise detection add-on that improves the sensitivity by a further 20 dB. The new circuit gives a full-scale indication with as little as 0.5 dB of quieting on the unsquelched FM background noise."

Figs. 2 and **3** in last month's "Homing In" are the schematic and board layout for the noise detector. G6UWO explains it this way: "Based on an 'absolute value' full wave rectifier, this circuit has perfect linearity and responds to the smallest of input voltages, making it ideal for detecting the slightest changes in quieting of the FM noise."

Dave's prototype polar plotter was a surplus video display unit with medium CRT persistence. He modified it by making his own X and Y deflection amplifiers from L165 ICs to drive the horizontal and vertical deflection coils, which he rewound with more turns of finer wire for greater screen deflection. He had to substitute a toroidal ring inductor for the horizontal coil in the high voltage DC-to-DC converter to keep it working properly.

The prototype proved the advantages of a polar RDF display, but Dave and John weren't satisfied. "It worked well," G6UWO wrote. "We successfully competed in our county championship for a whole season, winning by a narrow margin. But the display was too large. It had to sit on the floor between my feet and all the wires would get caught in my legs every time I jumped out to investigate possible hiding places.

"From a safety point of view, this was very unsatisfactory," he continued. "Operationally it was a nightmare! The large folding maps on my knee obscured the display and strong sunlight reflected off the screen. Also there was the problem of mentally transferring the angle of detected transmission from the display onto the map. Something had to be done to improve this situation. What we needed was a more compact, user-friendly setup.

"During the summer months, we scoured the radio rallies. John discovered a 2.5-inch-diameter radar display module from a Phantom fighter aircraft in one of the flea fair stalls. For fifty dollars, he snapped the bargain up and then worried if the tube would turn out to be faulty. Of course there were no circuit diagrams and most of the electronics was 'tropicalized' in a thick clear coating of a varnish-like material.

"I stripped the display to find that the power supply ran off 24 volts. It was a self-contained unit that would supply most of the potentials for the CRT. The only extras needed were negative grid bias and 9.7V for the tube heater. The heater was easy with a variable regulator. I used the high-voltage module recycled from an old fluorescent calculator display to give me up to –80 volts for the grid.

"The rest of the electronics was junk, apart from the deflection driver and output transistors that were on the end plate of the module. I decided to build my own deflection amplifiers incorporating these transistors, as I reasoned that they should be matched to the coils. I used a couple of operational amplifiers and tied the output

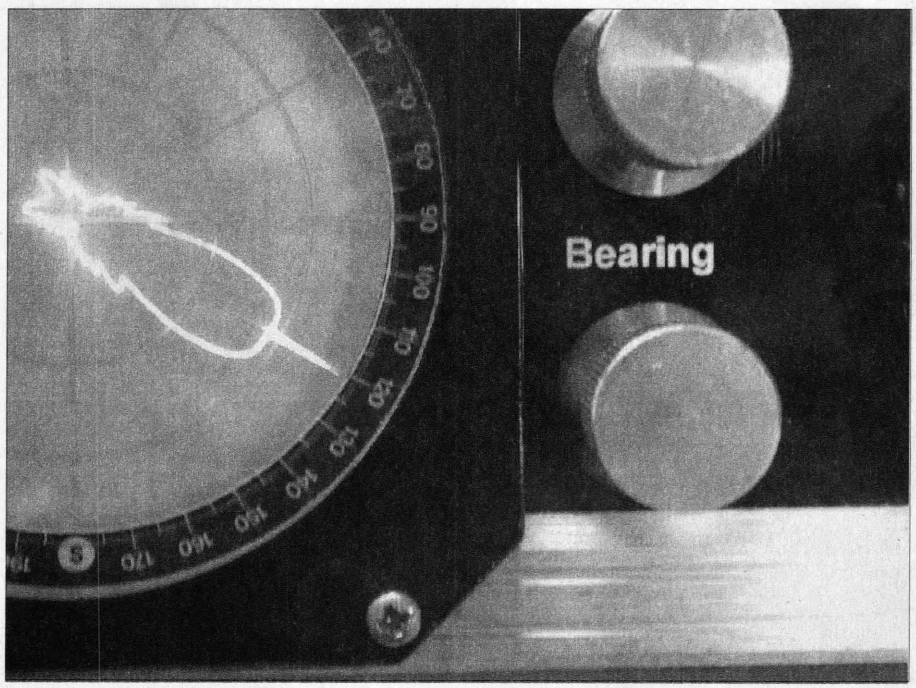

Photo C. *Artificial persistence creates a trace with consistent intensity. The sharp point is a marker for precise plotting. (Photo by Dave Bullock G6UWO)*

transistors into the feedback loop to keep the whole circuit linear.

"I now had the problem of finding a 24-volt source. Our local military surplus depot came to the rescue. By modifying some ex-aircraft 400 Hz inverters that produced -32V from +32V, I was able to get the inverter to produce -12V from a +12V input. Now I had ±12V for my deflection amplifiers and 24V for the HV supply. The whole module could run off the car battery.

"The new scan amplifiers and coils worked extremely well, allowing me to move the trace around the screen at great speed without distortion. But that exposed my next problem. Being a white screen, the phosphor had a very short delay persistence, making the readout look like a tadpole swimming around, rather than a coherent polar plot!"

Constantly refreshing

Dave realized that he needed an "artificial persistence" circuit. He designed it using a dual-port RAM, which has independent input and output ports that point to the same memory locations. The memory is loaded with signal-strength data at the antenna rotation rate, but reads out to the display at a much higher rate. It gives the appearance of a continuous display by refreshing at a rate that is faster than the persistence of vision.

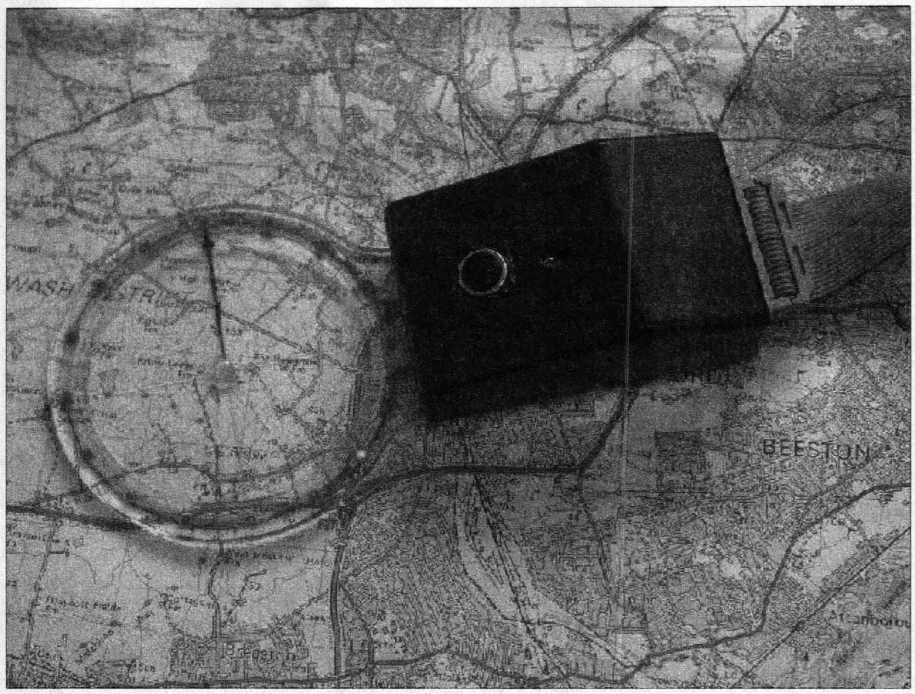

Photo D. *Transferring bearings from display to map is easy with this wand of light-emitting diodes. (Photo by Dave Bullock G6UWO)*

"Whilst I was working on the redesign, I also had a stroke of luck with the antenna position encoder," Dave says. "At work I had a broken graphics plotter come into the

ELMERS • VE's • INSTRUCTORS • CLUB GREETERS

Become A

HAM AMBASSADOR

The ham industry wants to support your efforts for ham radio growth with free instructor materials.

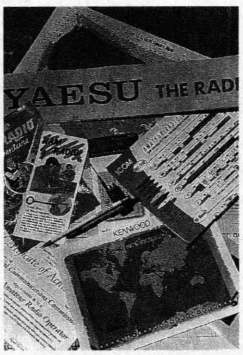

• Wall Maps • Log Books • Band Plan Charts

• Frequency Charts • Grid Square Guides

• Discounts on Licensing Materials

• Equipment Discount Program

• Gift Certificates

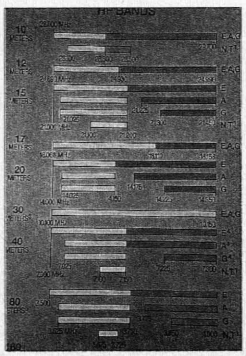

To request a detailed Ham Ambassador Introductory package, write to:
Gordon West c/o *73* Magazine 70 Hancock Rd., Peterborough, NH 03458. E-mail design73@aol.com

workshop as scrap. It contained some very nice optical shaft encoders made by Hewlett Packard that had 512 steps per revolution. This was an ideal opportunity to increase the resolution of the display from 208 steps to 512. I decided in the end, as everything else was 8 bit, to make it 256 points.

"I added a mechanical adjuster to turn the encoder with respect to the rotator system. With a signal source directly in front of the vehicle, the adjuster is rotated until the displayed lobe is drawn 'dead ahead' on the CRT. All misalignments in the system are removed in one go with this control, including any skew in the response of the antenna.

"As in the prototype, when the antenna turns, clock pulses from the shaft encoder drive an 8-bit counter that progresses through the RAM input addresses. The same clock pulses are fed to the 'start convert' pin of an A/D converter that digitizes the value of the S-meter voltage at that instant. An 8-bit number appears at the output of the converter, representing the magnitude of the signal at that position, and is stored in one of 256 RAM allocations.

"The antenna rotates continuously, storing data in the memory as it goes. At the 'dead ahead' position, a pulse from a second optical ring on the shaft encoder resets the address counter so that the antenna keeps in synchrony with the counter. I feared that under high-speed travel conditions and the high resolution of the encoder, extra pulses could be generated due to wind pressure on the antenna and slight backlash in the mechanics.

"The clock oscillator provides pulses that advance the output address counter. It steps through the output addresses of the Dual Port RAM and simultaneously, the EPROM address lines. The EPROM is loaded with sine and cosine waveforms, now regenerated with 256 points. The stored S-meter levels in memory are output to the D/A converter that restores them to a varying DC level. This, as before, controls gain of the sine and cosine D/A converters.

"As the clock oscillator runs, a circular timebase is created and signals are displayed on the CRT. The oscillator clocks the output system at a much higher rate than the input system is clocked by the antenna, so the display is that of a continuous plot being updated at the rotational speed of the antenna.

"All the aforementioned problems with wires and maps were eliminated by our miniaturization, and the controls were much easier to access, too. We didn't have any problems with jitter on the display due to slack in the mechanics, and the arbitration logic in the RAM invisibly takes care of any bus clashes."

Even with the high-tech CRT display, Dave and John put an S-meter on the console (**Photo B**). Based on experimentation with the system, they put marks on the meter to indicate approximate "miles downrange" for a transmitter of typical power output. The console also has a switch to select signal strength or noise mode, plus an RF attenuator in 10 dB steps from 0 to 100 dB. It goes between antenna and receiver to prevent overload.

"There is also an 'inch' control to zero the antenna dead ahead for high speed motoring between transmissions," Dave adds. "The Bearing control is another recent improvement. As can be seen on the display in **Photo C**, there is a sharp 'glitch' on the peak of the polar plot on the CRT. This is a pip marker that can be rotated 360 degrees around the display. The navigator moves it to select his best guess at the incoming direction. The pip data also goes via a ribbon cable to a clear-window wand that transfers this bearing to the map via a ring of LEDs (**Photo D**)."

Many thrills of victories

"The system has performed extremely well and we have been able to stay at the top of the Nottingham club's foxhunt championship for the last four seasons," proclaims G6UWO. "Dispensing with paper maps, we have adopted a GPS-based navigation system using a laptop computer. As an effort to make things work even better, we have modified the rotator to make it start and stop in two stages. The slow start should take some of the load off the mechanism as it gets up to speed. When I switch off, the rotator drops back to slow-mo and then autoparks dead ahead."

Does this inspire you to try a polar display in your own mobile T-hunting setup? Check your library for "Homing In" articles on five other such projects, as listed last month. Then decide what's best for your needs. Every system is unique and you probably won't want to copy any of them exactly, but a complete circuit description and schematics for the G6UWO/GØPSI version is available. Although there's no room to publish it all here, I'll mail a paper copy if you send me a self-addressed 9 x 12 manila envelope with postage for three ounces (77 cents in the USA).

Happy experimenting! Please send reports and photos of your successful polar

Continued on page 58

A GREAT gift idea for yourself, your ham friend(s), or your child's school library
is a subscription to 73 Magazine ... only $24.97!
Call 800-274-7373 or write to 70 Route 202 North, Peterborough NH 03458

Parker R. Cope W2GOM/7
8040 E. Tranquil Blvd.
Prescott Valley AZ 86314

Generating SSB

Use this tutorial to better understand — or better build — your next project.

Generating a single sideband (SSB) signal or, more accurately, a single sideband suppressed carrier (SSB/SC) signal, became necessary when SSB became the dominant communications mode in the HF bands. The battle between AM and SSB was won when the congestion on the bands became intolerable. While SSB has many advantages over AM, simplicity is not one of them.

SSB requires only half the bandwidth of AM and doesn't require the transmission of a carrier. Using only half the bandwidth theoretically doubles the number of transmissions that can exist in a band, and eliminating the carrier got rid of a great potential for producing heterodynes and interference in the receiver. Eliminating the carrier also reduced the power demands of the transmitter. Eliminating the carrier was good riddance.

Generating an SSB signal is now commonplace, even though it's complex. The home-brewer must face these complexities and make trade-offs in implementation, cost, and parts availability to accommodate his particular situation.

The chief disadvantage in generating an SSB signal has been the need for special, and usually expensive, components such as crystal filters or 90° audio phase shifting networks. The initial cost and availability weigh heavily against the filtering method of generating SSB. Audio phase shift methods require precision parts for good phase shift control and sideband suppression. A side issue of the phase shift method is the bandwidth that can be achieved with a particular implementation. The bandwidth for communications is relatively broad, about 300 Hz to 3000 Hz, or 10:1.

Generating a single sideband by filtering is the most straightforward method. It usually starts by generating a double sideband suppressed carrier (DSBSC) signal with a balanced modulator that produces just the upper and lower sidebands — the carrier f_c is suppressed. If the modulating frequency is restricted to 300 Hz to 3000 Hz, the output of the balanced mixer is two bands of frequencies, f_c+300 Hz to f_c+3000 Hz and f_c–300 Hz to f_c–3000 Hz. Therefore, to select one sideband requires a filter that cuts off in the interval between f_c+300 Hz and f_c–300 Hz; that is, an interval that is twice the lowest modulating frequency.

When the carrier f_c is even moderately high, the filter requires extremely

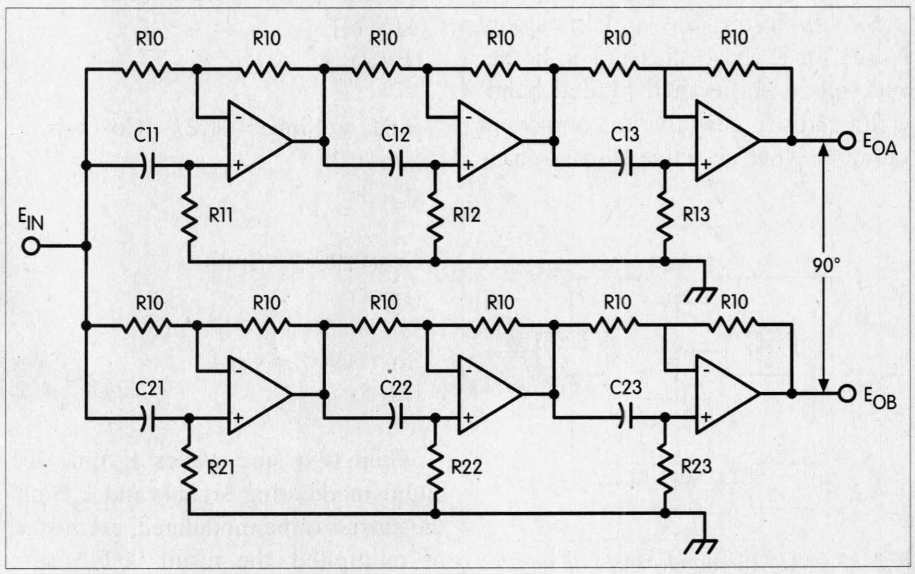

Fig. 1. An active phase shifter produces 90±0.1° of relative phase shift.

Name	Computed Value	Standard Value	Mfr. P/N
C11, 12, 21	1000 pF	1000 pF*	Xicon PF1H 102G
C13, 22, 23	0.01 µF	0.01 µF*	Xicon PF1H 103G
R11	16.09 k	16.2 k**	RN55D 1622F
R12	118.3 k	118 k**	RN55D 1183F
R13	510.5 k	511 k**	RN55D 5113F
R21	55.14 k	54.9 k**	RN55D 5429F
R22	23.79 k	23.7 k**	RN55D 2372F
R23	174.9 k	174 k**	RN55D 1743F
* = ±2%. ** = ±1%.			

Table 1. *Parts list.*

high Qs that can only be achieved with crystals or mechanical filters. Crystal filters typically operate at several MHz while mechanical filters usually operate below 500 kHz. These filters are moderately expensive and operate at a fixed frequency. Of course, the fixed filter frequency can be moved to the desired frequency in another mixing step.

The home-brewer usually opts for the phase shift method of generating SSB even though generating the audio 90° phase shift is not a simple process.

Early on, an RC lattice network was used to obtain the phase shift. Barker and Williamson was a commercial source for a phase shifter. The home-built phase shifter had limited bandwidth and was sensitive to component variation. Now, an active all-pass phase shifter is a better solution, even though it is still sensitive to component variation.

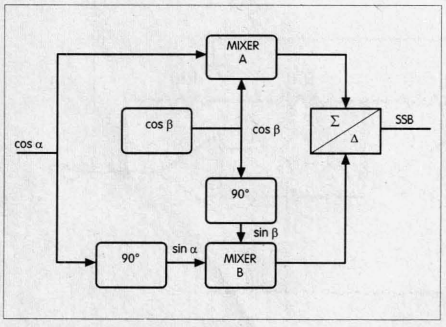

Fig. 2. *Single sideband can be generated by phase shifting.*

In the *Electronic Filter Design Handbook* by Williams, active all-pass sections are shown that can produce 90±0.1° of phase shift over a 10:1 bandwidth. A six-section filter with 90±0.1° phase shift, which translates into about 55 dB of sideband suppression, is shown in **Fig. 1.** The parts list is given in **Table 1**.

In the phasing method of generating an SSB signal, shown in **Fig. 2**, the audio signal is split into two equal amplitude channels separated by 90° and mixed with quadrature local oscillators. The mixer outputs are added to produce just the lower sideband or subtracted to produce just the upper sideband. The 90° phase shifts and amplitude equality are critical in that they determine the sideband suppression.

The sideband suppression is approximately 20 x log(tand/2) where d is the total deviation from 90° of both the audio and the local carrier. A total error of about 1.1° is required for 40 dB of sideband suppression. Of course, the amplitudes of both channels must also be equal.

The trig identities used in describing the various processes are:

Cosa x Sinb = 1/2 x [Sin(a–b) + Sin(a+b)]
(Eq 1)

Cosa x Cosb = 1/2 x [Cos(a–b) + Cos(a+b)]
(Eq 2)

Sina x Sinb = 1/2x [Cos(a–b) – Cos(a+b)]
(Eq 3)

Cos(f+90°) = Sinf
(Eq 4)

Sin (f+90°) = Cosf
(Eq 5)

When two sine waves E_aSina, the audio modulating signal, and E_bSinß, the carrier to be modulated, are mixed or multiplied, the result is E_aSina x E_bSinß. Trigonometric identities show

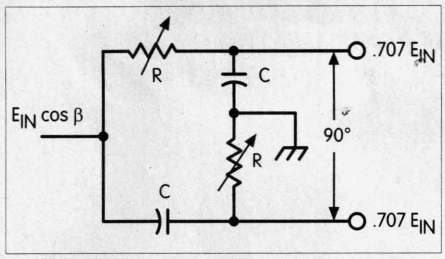

Fig. 3. *90° of phase shift for a single frequency is almost trivial.*

the product E_aSina x E_bSinß, equation 3, to be equal to:

E_o = E_aE_b x 1/2([Cos(a–b) – Cos(a+ß)]

The term Cos(a–ß) is the difference frequency or lower sideband, and the term Cos(a+ß), is the sum frequency or upper sideband. The amplitudes of both the sum and difference components are proportional to the term E_aE_b/2 and have no influence on the frequencies or the phase produced. Therefore, the amplitudes are not identified in the following descriptions.

In the phasing method of SSB generation, the modulating signal Cosa is split into two channels. One channel is shifted 90° to become Sina (eq 4). The local oscillator Cosß is also split into two branches of Sinß and Cosß. The Cosa signal is mixed with the local oscillator Cosß in mixer A to produce an output of Cosa x Cosß (eq 2). The Sina signal is mixed with local oscillator Sinß in mixer B to produce an output of Sina x Sinß (eq 3).

From the trigonometric identities equations 2 and 3, the outputs of the two mixers are seen to be:

A channel = Cosa x Cosß = Cos(a–ß) + Cos(a+ß)

B channel = Sina x Sinß = Cos(a–ß) – Cos(a+ß)

When the outputs of the two mixers are summed, the result is Cos(a–ß), the lower sideband, and the upper sideband cancels. When the outputs are subtracted, only the upper sideband, Cos(a+ß), remains.

Continued on page 16

Back Issues
of
73 Magazine
Only $5.00 Each!
Call 800-274-7373

The New Pools!

Examination Test
Questions & Answers

The exact questions, multiple choices and answers for the Technician Class, General Class, *and* Extra Class *operator's license.*

Only
$9.95
Plus $3.50 S&H

Omega Sales
P.O. Box 376
Jaffrey, NH 03452
800-467-7237

From MILLIWATTS to KILOWATTS™

1968 30 Year Anniversary 1998

RF PARTS HAS IT!

Complete inventory for servicing Amateur, Marine, and Commercial Communications Equipment.

- Transmitting Tubes & Sockets
- RF Power Transistors
- VHF/UHF RF Power Modules
- Low Noise RF FET's
- Bird Electronics Wattmeters
- Doorknob Capacitors
- Chokes • Broadband Transformers

Se Habla Español • We Export

Visit our Web Site for latest Catalog pricing and Specials:
http://www.rfparts.com

ORDERS ONLY
1-800-RF-PARTS • 1-800-737-2787
ORDER LINE • TECH HELP • DELIVERY INFO.
760-744-0700
FAX **760-744-1943** TOLL-FREE FAX **888-744-1943**
E-MAIL: **rfp@rfparts.com**

RF PARTS
435 SOUTH PACIFIC STREET
SAN MARCOS, CA 92069

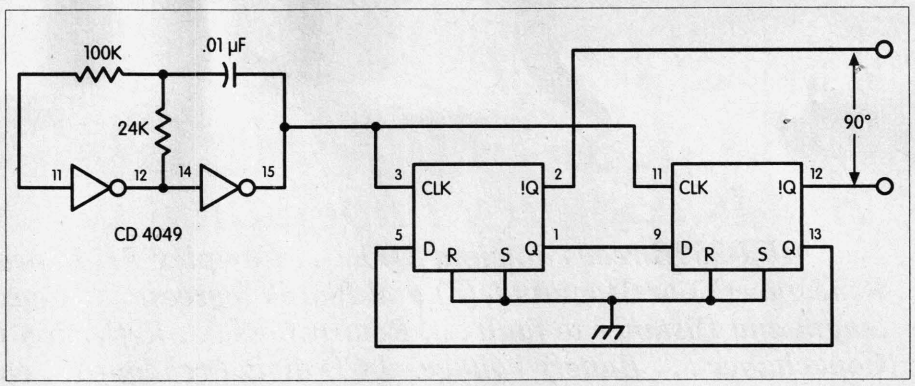

Fig. 4. Exactly 90° of phase shift can be produced digitally.

Generating SSB

continued from page 14

Obtaining an approximate 90° phase shift for a fixed local oscillator frequency is straightforward, but obtaining exactly 90° requires a bit of component adjustment and accurate measurement. Quadrature local oscillators can be produced with Rs and Cs as shown in **Fig. 3**. For example, plus and minus 45° phase shifts are obtained with simple low-pass and high-pass RC filters. The low-pass filter has a phase shift of –45° when $R = X_c$. The phase shift for the high-pass filter is +45° when $R = X_c$. The relative phase shift then is 90°.

While the RC phase shifter for the local oscillators is simple in concept, the devil is in the details. The output voltage of each filter is 0.707 x $E_{in} \angle \pm 45°$ only when X_c is exactly equal to R. Unfortunately the tolerances of the R and C aren't zero, and 5% parts can produce a phase error as great as ±3°, which limits the sideband suppression to some 30 dB even when the audio phase shift is exactly 90°. Therefore, R must be adjusted to make $R = X_c$ and $E_{out} = 0.707 \times E_{in}$.

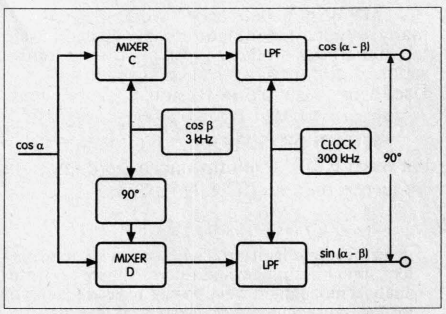

Fig. 5. Wideband phase shift can be produced by mixing.

An exact 90° phase shift for the local oscillators can be obtained digitally with a dual D flip-flop as shown in **Fig. 4**. In the D flip-flop, the data on the D input is transferred to the Q output on the transition of the clock. Therefore, quadrature signals are produced when both flip-flops are clocked simultaneously and the not-Q output of one is fed to the D input of the other. The two Q outputs are separated by exactly 90°, but in the process the clock is divided by four.

The maximum clock frequency depends on the flip-flops used. For example, the CD4013 CMOS ICs can be clocked up to 3.5 MHz when operated from 5 V, or 12 MHz when operated from 15 V. When operated with a 12 V supply, quadrature local oscillators up to 3 MHz can be produced. The digital scheme is essentially independent of frequency and is dead-on 90°. The fact that the output is a square wave has no influence on the mixing, but does determine the harmonics and their amplitudes present in the output.

An active audio phase shifter with its close tolerance parts can be avoided by the mixing scheme shown in **Fig. 5**. The audio signal Cosa is applied simultaneously to two mixers C and D which mix the audio with quadrature local oscillators Sinß and Cosß. From the trigonometric identities of equations 1 and 2, the outputs of mixer C and D are:

C mixer = Cosa x Cosß = Cos(a+ß) + Cos(a–ß)

D mixer = Sina x Cosß = Sin(a+ß) + Sin(a–ß)

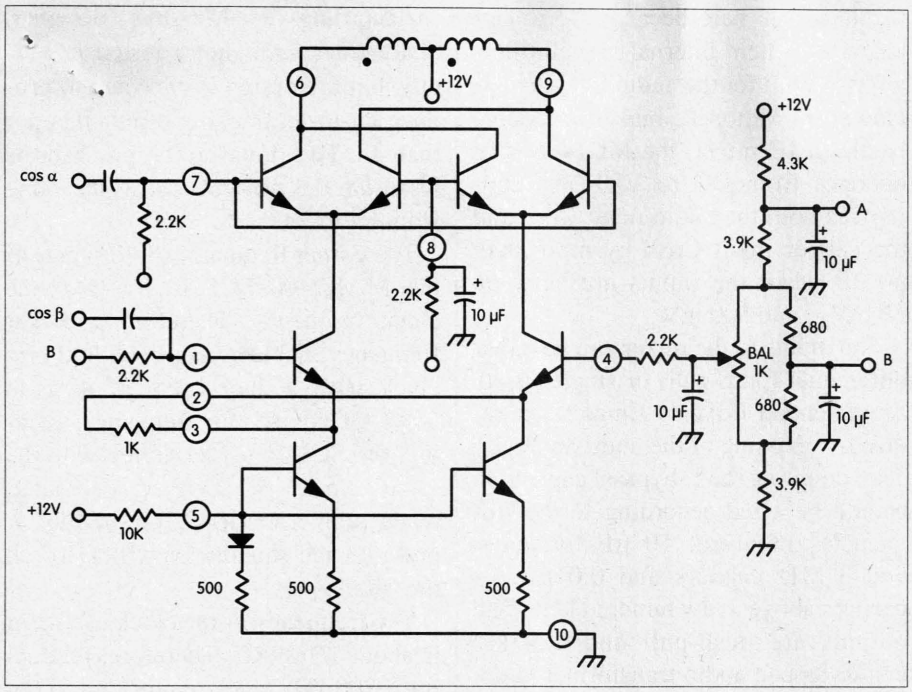

Fig. 6. An MC1496 mixer can operate from DC to VHF.

The outputs are in quadrature. Sin(a–ß) and Cos(a–ß) can be used in the phase shift method of generating single sideband shown in **Fig. 2**.

When the difference outputs of mixers C and D are applied to mixers A and B of **Fig. 2** and mixed with quadrature local oscillators $Cosw_c$ and $Sinw_c$, the outputs of mixers A and B are:

A mixer = $Cos(a–ß) \times Cosw_c = Cos(a–ß–w_c) + Cos(a–ß+w_c)$

B mixer = $Sin(a–ß) \times Sinw_c = Cos(a–ß–w_c) – Cos(a–ß+w_c)$

Adding the outputs of mixer A and mixer B results in $Cos(a–ß–w_c)$, with $Cos(a–ß+w_c)$ suppressed. Recall that

Continued on page 18

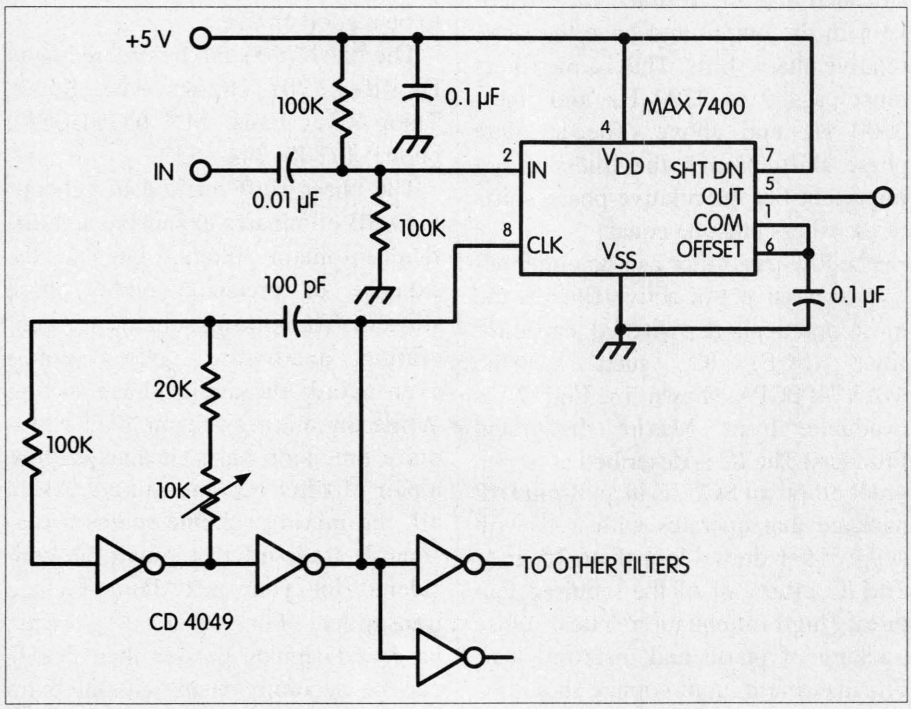

Fig. 7. The SCF is driven with a CMOS clock oscillator.

ALL ELECTRONICS CORPORATION

12 VDC 2.5 Amp Switching Adaptor

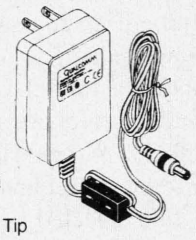

Plug-in-wall regulated switching power supply. Ideal for cameras, scanners, cell phones, computers or any devices sensitive to power fluctuations. Input: 100 - 240 Vac. 6 foot output cord has a coax DC power plug (2.1mm id, 5.5mm od). Tip positive. Ferrite snap-bead for EMI suppression. Compact, 3.23" x 2.23" x 1.38" UL, CSA, CE. **CAT # PS-1225**

$15.00 each — 10 for $12.50 each, 100 for $10.00 each

40 RPM 115 Vac Motor

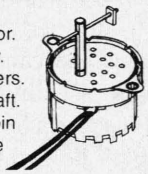

Cramer Co # 105VA150-E 40 RPM, 115 Vac gear motor. 1.83" diameter x 1.18" body. Mounting ears on 2.1" centers. 0.25" diameter x 1" long shaft. Prepped with a 1.25" long pin through the hole in the drive shaft. Pin is removable. 4" long pigtail leads. UL, CSA. **CAT # ACM-108** **$2.50 each**

3 Outlet Lighter Cord w/ Battery Monitor

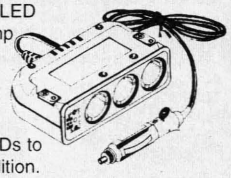

Three foot cord with LED lighted, fused, 10 Amp plug at one end and three outlet jacks at other end. Jack assembly has red, yellow and green LEDs to indicate battery condition. Can be mounted via mounting ears (4.7" centers) or double-sided tape (included). Mounting ears fold out of way if not in use. **CAT # CLP-44** **$3.75 each**

ORDER TOLL FREE
1-800-826-5432
SHOP OUR ONLINE STORE
www.allelectronics.com
CHARGE ORDERS to Visa, Mastercard, American Express or Discover

TERMS: *NO MINIMUM ORDER.* Shipping and handling for the 48 continental U.S.A. $5.00 per order. All others including AK, HI, PR or Canada must pay full shipping. All orders delivered in CALIFORNIA must include local state sales tax. Quantities Limited. NO COD. Prices subject to change without notice.

CALL, WRITE FAX or E-MAIL for our *FREE* 96 Page CATALOG Outside the U.S.A. send $3.00 postage.

MAIL ORDERS TO: ALL ELECTRONICS CORPORATION P.O. Box 567 Van Nuys, CA 91408 FAX (818)781-2653 e-mail allcorp@allcorp.com

Generating SSB

continued from page 17

a–ß is the lower sideband of the mixers C and D.

There is no restriction on the frequency of a, ß, or w_c. However, from a practical standpoint ß should be as low as possible to simplify filtering. To that end, the local oscillators Cosß and Sinß are made equal to the maximum audio frequency, 3 kHz. The outputs of mixers C and D then are each two bands of frequencies 0 to 2700 Hz and 3300 Hz to 6000 Hz in quadrature. The difference frequency, 0 to 2700 Hz, can be selected with a low-pass filter for use in the phase shift method of SSB generation.

To ease the filter requirements, mixers C and D should have outputs that are free of the inputs a and ß. Eliminating these inputs is critical because they have frequency components that are the same as the desired (difference) output and cannot be removed by filtering. A solution is at hand: a double balanced mixer has an output that is free of the two inputs a and ß.

Double balanced mixers such as Mini-Circuit's used at IF and RF are inappropriate here because the inductances of their internal transformers are too small for the audio frequencies. However, Motorola makes a double balanced IC mixer, the MC1496, that operates from DC to VHF and suppresses both the audio input Cosa and the carrier input Cosß by more than 50 dB when the inputs are between 60 mV_{rms} and 500 mV_{rms}.

The inputs to the mixer can be either differential (push-pull) or single-ended. Single-ended drive is simpler but requires bypassing of the undriven input. The coupling and bypass capacitors should be sized according to the frequencies involved: 10 µF for audio and 3 kHz carriers and 0.01µF for carriers above a few hundred kHz. The outputs are push-pull and a 1 kΩ center-tapped audio transformer is desired for the low frequency mixers. The mixers A and B operate at RF, and an RF transformer is required. Single-ended drive with a single +12 volt supply is shown in **Fig. 6**.

The mixer is available in either a 10-pin 603 case, similar to a TO-5, or a 14-pin DIP. The pin numbers shown in the drawing are for an MC1496G metal case. The pinouts for the MC1496P 14-pin DIP and MC1496G metal can are different.

The low-pass filters on the output of mixers C and D must reject the upper sideband and any residual local oscillator in the output and have the same relative phase shifts. That is, the filters must pass 0 to 2700 Hz and reject 3000 Hz and above. The absolute phase shift through the filters is not important but the relative phase shifts of the filters must be equal.

The low-pass filter can be either active or passive. An active filter is the most practical. A switched capacitor filter (SCF) IC, such as the MAX7400CPA shown in **Fig. 7**, is available from Maxim Integrated Products. The IC is described as an 8th order elliptical SCF IC in an 8-pin DIP package that operates with a +5 volt supply and draws less than 3.5 mA. The IC offers all of the required features: high attenuation rates, close tracking of phase and insertion loss. The maximum input voltage should be restricted to about 4 V_{PP}.

According to Maxim's designer, phase tracking is not a tested parameter, but the design is expected to produce lot-to-lot tracking of much better than 1°. The ripple in the passband is less than 0.3 dB and is also the same from lot to lot.

The corner frequency (3 dB point) of the MAX7400 SCF is 1/100 of the clock frequency. Therefore a corner frequency of 3 kHz requires a 300 kHz clock with a duty cycle of 40% to 60%. Of course, for frequency tracking, the SCFs must be driven with the same clock. A separate oscillator, made with a CD4049, U1 in **Fig. 7**, provides the squarewave clock for all the filters.

The frequency of the clock oscillator is about 1/1.39RC. Therefore, producing a 300 kHz clock requires an RC of 2.4 x 10^{-6}. A 100 ± 5% pF capacitor and a 10k pot in series with a 20k±5% fixed resistance can set the clock for exactly 300 kHz.

While the maximum audio frequency is assumed to be 3 kHz, it is not guaranteed. A filter located between the microphone and the modulator can ensure that there are no frequencies above 3 kHz. This need to restrict the bandwidth is applicable to any method of SSB generation. The input filter need not be exotic — it can be passive or active — but the MAX7400 seems to be a good choice.

The MAX7400 can be ordered from Digi-Key, 701 Brooks Ave. South, Thief River Falls, MN 65701-0677; phone: 1 (800) 344-4539.

The phase shift method of generating SSB eliminates expensive and difficult-to-obtain filters, but at the expense of precision audio phase shifters. The mixing scheme for generating quadrature audio signals even avoids the audio phase shifter. While the mixing scheme doesn't require precision parts, it does require a pair of filter ICs and mixers. All in all, the mixing scheme seems a reasonable trade-off that should be considered for your next home-brewed transmitter. For what it's worth, baseband signals greater than 3 kHz can be accommodated without extra effort. 73

208-852-0830
http://rossdist.com
Over 8950 HAM Items in Stock!
IC-2800H
ICOM
Under $540
RDC
Check Out Our Specials! We're On The Web.
ROSS DISTRIBUTING COMPANY
78 S. State Street, Preston, ID 83263
All Prices Cash FOB Preston
Hours Tue.-Fri. 9-12/2:30-6 • 9-4 Mondays. Closed Saturday & Sunday

FREE!
NEW CATALOG
CALL TOLL FREE: 1-800-JAN-XTAL
Quality Crystals and Oscillators for:
AMATEUR BANDS • CB • MARINE VHF
SCANNERS • MICROPROCESSORS • PAGERS
P.O. Box 60017 • Fort Myers, Florida 33906
VISA (941) 936-2397 MasterCard
JAN Crystals

transmitting on 2 meters into one feedline while terminating the other with a wattmeter and a good VHF dummy load. Very little RF should leak from coax to coax. In my case, transmitting 22 watts into the horizontal coax gave only 6 milliwatts out of the vertical coax, and vice versa (35 dB isolation).

Wire lengths of the DE on my modified Yellowjacket are 18-3/4" for the wire between the two feed blocks (measured screw-to-screw), and 59-3/8" for the wire that forms the other three sides of the loop. Lengths of the other Cubex element wires are unchanged. Cubex instructions call for six turns of feedline around the Yellowjacket boom, but these added turns are unnecessary and undesirable when the ferrite baluns are in place (**Photo C**). Cubex suggests using RG8X low-loss feedline, but the difference in loss for short mobile T-hunting feedlines is negligible.

Hiders occasionally transmit unusual polarizations. For instance, an ammunition-can T propped up in a tree may put out a signal polarized at a 45-degree angle between horizontal and vertical. There have even been some circularly polarized T's to find on our Saturday night hunts.

By combining signals from the horizontal and vertical feedlines of the dual-quad with proper phase relationship, you can achieve 45-degree and circular polarizations. "Homing In" for April 1989 has plans for WA6DLQ's six-position polarization switchbox. Though intended for use with his dual-feed yagi, it will also work with the dual-quad. A similar switchbox is in the Radio Society of Great Britain's *VHF/UHF Manual*. Feedlines from switchbox to each feed point must be exactly equal lengths when using the switchbox.

If T-hunting in your area requires you to make frequent polarization decisions, consider adding a dual-polarization quad to your bag of tricks. Ed Buchanan of Cubex has agreed to sell a dual-feed version of the Yellowjacket quad to "Homing In" readers. It includes two feed point termination blocks and associated hardware. Contact Cubex directly and ask for the T-hunt Special. Please understand that I have no business association with Cubex, so do not send inquiries about this offer to me.

Whether you make your own dual-polarization RDF quad or try the modified Cubex Yellowjacket, let me know how it works for you. Send E-mail to Homingin@aol.com, or write to me at the address at the beginning of this article. Don't forget to check out the Homing In Web site: http://members.aol.com/homingin/ is the URL.

References:

1. Dopplers and time-difference-of-arrival RDF sets use vertically polarized dipoles or ground plane antennas.

2. Available from Roy Lewallen W7EL, P.O. Box 6658, Beaverton, OR 97007.

3. Robertson,"The Quadraquad —Circular Polarization the Easy Way," *QST,* April 1984, page 16.

4. Maxwell, "Some Aspects of the Balun Problem," *QST,* March 1983, page 38. Ferrite baluns are also briefly described in recent editions of *The ARRL Handbook.*

5. Cubex Quad Company, 2761 Saturn Street, Unit C, Brea, CA 92821; (714) 577-9009.

6. Available from Amidon Associates, P.O. Box 956, Torrance, CA 90508; (310) 763-5770.

7. Prices for FB-43-2401 beads from Amidon are $4.50 per dozen or $16 per hundred, plus shipping/handling.

Radio Bookshop

Phone 800-274-7373 or 603-924-0058, FAX 603-924-8613, or see order form on page 88 for ordering information.

Code Tapes

73T05 **Genesis 5 wpm code tape** This beginning tape takes you through the 26 letters, 10 numbers and necessary punctuation complete with practice every step of the way. $7.00

73T06 **The Stickler 6 wpm code tape** This is the practice tape for those who survived the 5 wpm tape and it is also the tape for the Novice and Technician licenses. It is comprised of one solid hour of code. Characters are sent at 13 wpm and spaced at 5 wpm $7.00

73T13 **Back Breaker 13 wpm code tape** Code groups again at a brisk 13+ wpm so you'll be really at ease when you sit down in front of a steely-eyed volunteer examiner who starts sending you plain language code at only 13 per. $7.00

73T20 **Courageous 20+ wpm coce tape** Go for the extra class license. $5.95

73T25 **Mind Boggler 25+ wpm code tape.** $7.00

ABOVE & BEYOND

VHF and Above Operation

C. L. Houghton WB6IGP
San Diego Microwave Group
6345 Badger Lake Ave
San Diego CA 92119
clhough@aol.com

Microwave Stripline Retuning Procedures

This month I would have liked to cover the synthesizer that I used for the 1296 MHz transverter presented last month. However, I haven't completed the conversion documentation in sufficient detail. I *have* made the unit function as described. Still, notes and other details must be reconfirmed for accuracy—I will get the details to you as soon as possible.

Instead, this month I will continue trying to provide ideas on how to convert surplus microwave material for use on the amateur bands. This has been partially covered, but here are the full-blown details covering tuning procedures, and specifically the methods that Kerry N6IZW and I use in converting microstripline circuitry. These procedures were developed by Kerry and are presented in a general format, suitable for all microwave/UHF amateur bands of interest. Here are Kerry N6IZW's modification details for retuning surplus microwave microstrip circuits for the amateur bands:

In recent years, considerable quantities of surplus microwave equipment have become available to the amateur community. The reasons for adapting surplus equipment rather than building from scratch often include cost, time and performance. The cost for a typical piece of microwave surplus purchased by an astute amateur will be far less than the cost of a few new components. Often many hours that would otherwise spent in locating components, fabricating boards, and building enclosures are saved.

The performance obtainable is usually quite good due to the commercial processes used to fabricate the units in quantity. Most surplus microwave equipment is tuned for commercial or military frequencies, making it unusable on amateur frequencies without modification. This is what causes the same piece of equipment to be so much junk for one person, but a treasure for someone equipped for retuning.

High technology: good news and bad news

Microwave circuit fabrication techniques have progressed from waveguide to microstrip printed circuit boards to ceramic substrate hybrids to large-scale monolithic integrated circuits. Waveguide-type equipment still finds favor among those beginning on the amateur bands at 5.7 GHz and above, but microstrip circuits are prevalent among those building medium- to high-performance amateur equipment through 24 GHz. The good news is that the microstrip surplus is typically available because the industry is moving into higher and higher integration technologies such as the hybrid or MMIC.

The bad news is that the newer technology equipment often contains integrated components which are internally matched or tuned for a specific frequency and are not practical for most amateurs to modify. An example of a nonmodifiable piece of surplus is the typical VSAT terminal now becoming available. These units contain >1 watt transmitters at 14 GHz and low-noise receivers around 12 GHz, but are so highly integrated that very few of the microwave components are usable for amateur purposes.

The conversion of microwave surplus equipment may eventually dwindle as the modifiable technologies disappear, but this should not be a problem for some years to come. Another good side of the newer technologies is that they provide high performance with low cost and ease of application for those assembling their own microwave circuit boards

using new components. Below are some examples of successfully modified surplus equipment.

C-band TVRO LNAs

These low-noise amplifiers are available in the $5 range at local flea markets. In their original condition, they provide about 50 dB gain with a 1 dB noise figure over the 3.7 to 4.2 GHz range. They require about +15 to +24 to operate with power being supplied to the output connector. When the internal filters are removed the amplifier is usable over the .8 to 4.2 GHz range, with the noise figure increasing to about 3 dB at the low end. I have used one of these units as the 2.4 GHz LNA for an OSCAR-13 receiver.

Ku-band power amplifiers

Several types of 14-14.5 GHz power amplifiers with 25 dB or more gain and .5 to 2 watts output are available for about $35. These units are readily retunable for use on the 10 GHz amateur band, with somewhat increased output over that available at 14 GHz.

Ku-band LNA

Several types of Ku-band TVRO and VSAT LNAs are available in the $20 range. These can typically be retuned for use on the 10 GHz amateur band, providing 20 dB gain and a 1 to 3 dB noise figure.

Tools and test equipment: signal sources

Almost any available source that can be set to the frequency range of interest can be used. Usable sources include commercial signal generators as well as Gunn, transistor, FET, and YIG oscillators. The frequency stability of most sources is more than adequate for tuning microstrip circuits. Short-term amplitude stability is needed; often a single matching element adjustment may change the output by less than 1 dB. The signal level needs to be large enough at the beginning to have measurable output appear, but should be reduced to keep any stages from possibly saturating. For small signal devices the input should not exceed about +5 dBm to prevent device damage.

Attenuators

Attenuators (3 dB minimum) should be applied directly to the input and output of the circuit to be tuned, for two reasons: To reduce any possible test setup mismatch that might otherwise be compensated for in the tuning process, and to protect the power measuring equipment and the equipment being tuned. This is a particularly important point when working with power amplifiers which may accidentally oscillate during the tuning procedure.

"An astute amateur can buy a piece of microwave surplus for much less than the cost of a few new key components."

Power monitors

Almost any type of power monitor can be used as long as it has sufficient resolution and stability to identify changes of .5 dB or less. I started with a spectrum analyzer but found a power meter to be much more satisfactory for detailing small changes.

Power supplies

Power supplies should be well regulated and have current limiting which is adjustable to just above the nominal operating current. The bipolar devices typically use a single power supply while the GaAs devices typically require a negative gate bias. The gate bias should normally be applied prior to applying the drain voltage to prevent possible device damage caused by the transistor attempting to turn on hard.

My experience has been that the properly adjusted current-limited supply will prevent device damage should the gate bias be accidentally removed during the tuning process. Always remove power when making connections and soldering tuning stubs. Make sure the amplifier output is terminated before applying power. The power supply ground output should be connected to earth ground.

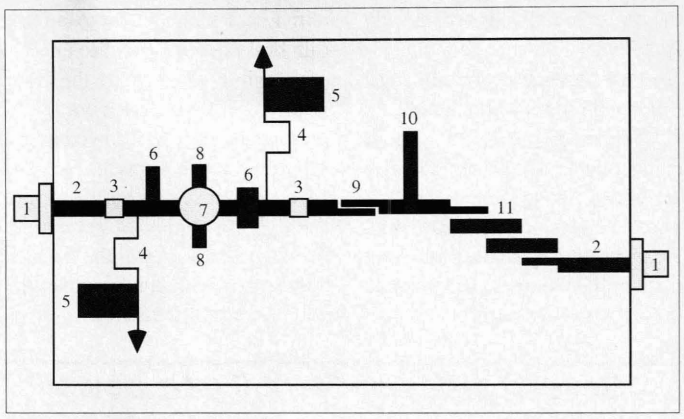

Fig. 1. Typical microstrip circuit components, showing layout of microwave amplifier filters and associated stripline components:
1. RF input/output connectors
2. Main 50Ω microstrip transmission line
3. DC blocking/interstage coupling capacitors
4. High impedance bias lines >100Ω, usually 1/4 wavelength (as long as these are narrow lines, no modification needed
5. 1/4 wave pads to provide RF ground to bias lines (open one end), normally no modification needed
6. Matching stubs may be symmetrical or asymmetrical (may need to be removed for best results)
7. Bipolar or FET device: FET gate values typically -.5 to -1.5V; FET drain values typically +2 to +9V
8. Emitter or source ground pads (direct connection to ground plane is critical)
9. Interstage filter/DC block; typically, cut with craft knife and insert capacitor (difficult to retune)
10. 1/4 wave bandpass filter (one end grounded), typically disconnected at main transmission line; possibly retunable if length/ground point can be modified
11. Bandpass filter, modifiable with some success by symmetrically extending all elements of filter.

Soldering iron

A soldering iron with a very small grounded tip is essential. The grounded tip is absolutely necessary to prevent 60 Hz power line or static potential from damaging GaAsFET devices. Small signal GaAsFETs are often damaged if the gate voltage exceeds 3 to 5 volts. The drain voltage limit is typically 5 to 8 volts. The limit for power devices is usually a few volts higher.

Microstrip tuning techniques

Here is the basic approach I have used to retune many surplus amplifiers:

Everything must be grounded to power (earth) ground including the soldering iron tip. The typical FETs in microwave amplifiers will self-destruct with more than 5-10 volts on the gate.

Apply only as much input RF power as required to get usable output measurement. This reduces the chance of damage to higher power devices prior to getting the output matched. Also, it prevents saturation of a stage which then appears not to respond to tuning. Applying more than about +10 dBm directly to small FETs may cause damage.

Use current-limited power supplies set to limit slightly above the normal expected operating current. This will in most cases prevent blowing up the FETs if the negative gate bias is missing or something is accidentally shorted with the tuning wand. With this approach, sequenced turn on of

the power supplies is not usually important.

Place attenuators directly at the input and output of the amplifier. This removes the effect of poor cable, source and power detector matching. Always remove power when making connections and soldering tuning stubs. Make sure the amplifier output is terminated before applying power.

ohm line. Be careful not to cut the thin brass lines. If you are unsure of possible damage to the bias lines, carefully check continuity or use a magnifier to do visual inspection before applying power. In some cases it pays to go through the agony of removing the stub completely as the correct new stub placement may overlap and cause problems.

"Several types of 14-14.5 GHz power amplifiers are readily retunable for use on the 10 GHz amateur band."

Tuning procedure

Prepare the tuning wand and tuning stub material. Cut about 1" or 2" strips .080" wide (not critical) of about the same width as the main 50 ohm microstrip lines in the amplifier from thin copper or brass stock (.003" to .010"). Tin both sides of the strips and flick off excess solder. Make several tuning wands by cutting one end of a wooden toothpick square at the largest diameter. Using SuperGlue™, attach a square (.080" x .080") of the prepared tinned copper or brass to the curved end of the toothpick. Wipe off excess glue from the exposed side of the square and let dry.

Remove existing tuning stubs. Using an X-Acto™ knife, make a deep enough cut to disconnect tuning stubs from the main 50

Connect the amplifier to the signal source, attenuators, power detector and power supplies. Turn on the power and adjust input attenuation for as low an input as can be readily detected on the output. Start at the output and slide the tuning wand along (in contact with) the main 50 ohm line, watching for an increase in output. Note the maximum output reading obtained with the wand. Remove power and solder a square of the prepared material in the same position as noted by the wand.

Do not add solder. The tinning is normally sufficient to allow the new tuning stub to be held in place with the pointed end of a toothpick and then just touched with the soldering iron to reflow the solder. Turn on the power and verify that the output is as high or higher than obtained with the wand. Move the tuning stub if required to obtain results equal to or better than those of the wand.

Slide the wand over the previously attached new stub and if improvement can be made, attach another square. Continue this for the entire length of the main 50 ohm line until no further improvement is found. Increase the input power if working with a power amplifier and retune the output stage for maximum power. Be careful here not to mismatch the output so badly with the wand as to damage the FET.

The process can be very slow, with some stubs only gaining a fraction of a dB. In most cases it will take all of those small increases to get good results so don't expect to see major improvement with a few stubs. It may take four stubs per stage sometimes to get the maximum output.

Additional notes

Direct grounding of a microwave power device emitter/source is essential for proper operation. Any form of insulating grease can prevent full gain/power output from being obtained.

When mounting boards into enclosures, take care to ensure that the entire perimeter of the board is connected to the enclosure to prevent oscillation. 73

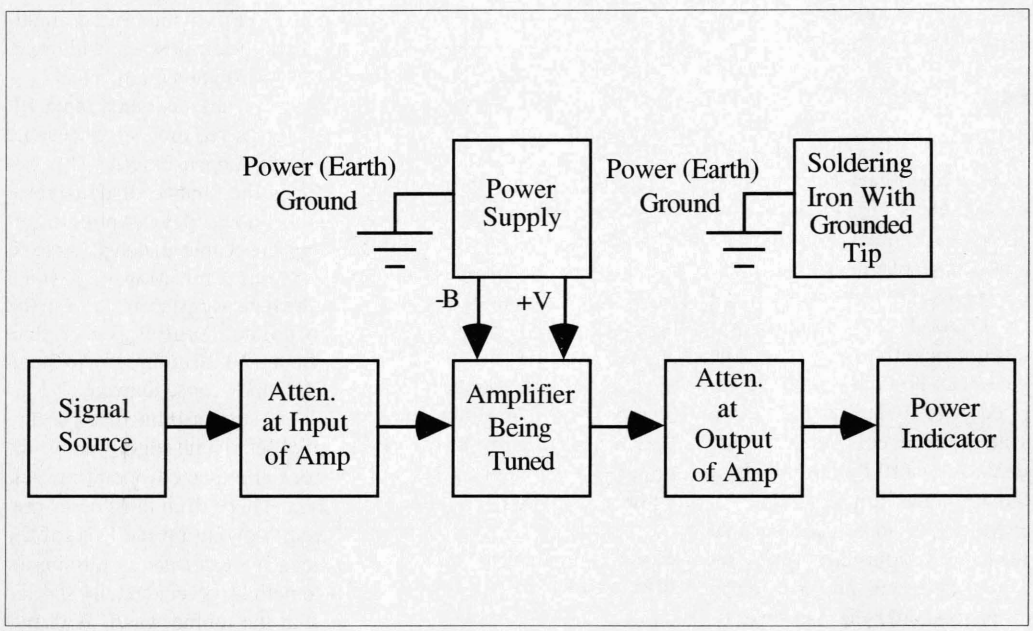

Fig. 2. Equipment configuration for retuning microstrip amplifiers.

LETTERS

Continued from page 7

truly are the unsung heroes of amateur radio—I thank you all, and please do keep up the great work! There are people out there who really do appreciate it.

Aw, shucks... Wayne.

Roger Wendell WBØJNR. Wayne, in "Never Say Die" you asked if we'd like to hear you talk about something besides ham radio. You bet! How about the beauty of 3.5 billion years of organic evolution and what hams can do to save it? We don't need any more money schemes, dirty religions, or mindless hobbies—we need more of nature—the real world.

Roger, I've flown over the Pacific Northwest, so I've seen the ugliness of clearcutting our forests. I've seen the horrendous scars of strip mining. I'm also seeing the pollution of the radio frequencies, with around 30,000 rock music radio stations crowding my AM and FM dial, and 200 or so TV channels of mind-rotting crud. Our school system is crumbling. Our health care system is just as bad as our school system. Crime, drugs, welfare, and so on. Yes, we've made a real mess of our states, country and planet and we're trying to figure out how to go out and spread it to other planets. So what do we do, knuckle under and try to cut as big a piece of the pie as we can for ourselves, and to hell with the mess we make doing it? Or do we fight? But how can you fight City Hall? I've already proposed a way we can secretly infiltrate the "system" and start changing it, working from the inside. Roger, we hams are 700,000 strong, but only if we're working together. As individuals we're of no significance. Yes, as small a group as we are—we have the potential to change our cities, our states, our country, and then the world. Our foes are entrenched interests, apathy, and indifference. Our strength is a never-say-die attitude. Motivation. Determination. Perseverance. Roger, 700,000 people can be an army... Wayne.

Cliff Gieseke W4ZFL. UFOs are a topic I've been fascinated with since the early '50s, when I was first

Continued on page 62

How to Silverplate RF Tank Circuits

A simple and inexpensive process to reduce losses.

Ronald Lumachi WB2CQM
73 Bay 26th Street
Brooklyn NY 11214-3905
[WB2CQM@juno.com]

In order to attain super-signal, top-gun status in the DX pileups, the big boys all utilize a number of well-known, high-performance, big-signal, high-ticket-priced pieces of equipment in order to maintain their razor's-edge status. Multi-element Big Bertha arrays on wide-spaced booms, state-of-the-art legal-limit Peter Dahl Hypersil-transformer-equipped amplifiers, and minuscule-loss transmission cable are routinely installed from the outset to maintain a signal that is a cut above the crowd. It doesn't end there! Antenna components are continually manipulated in order to attain that elusive 1:1 SWR, and controls are tweaked to gain every ounce of power from paired high-current monster ceramic tubes.

From the "What's left to do?" scenario, a question naturally arises. If everyone in that exclusive club is equal in signal intensity and operating expertise from the starting gate, what's left to do legally to go that one increment higher?

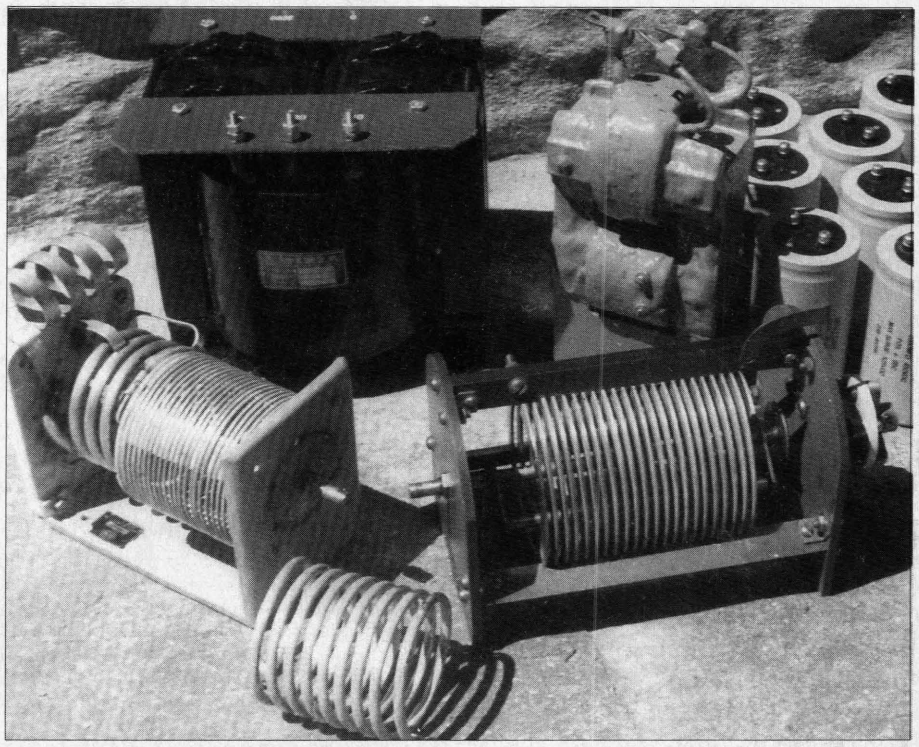

Photo A. *Essential high-power amplifier components. View of an indispensable Peter Dahl high-current plate and filament transformer for top-gun linear amplifiers. Viewing CCW: a bank of 2000 µF @ 450 VDC/500 VDC capacitors; the 10–160m roller inductor; a modified vintage B&W 850 A 10–160m tank circuit/integral switch combination; and a 10–40m coil. All have been silverplated and are ready for assembly.*

Photo B. *Silverplating kit (foreground) containing the jars of silverplating gel, copperplating gel for steel (see text), wire, clips, and plating brush. Note the metal "flap" on the top side of the brush that presses the bristles to the work being plated and completes the circuit. In the background is an array of chemical and abrasive cleaning materials, a wire-and-fabric abrasive wheel, emery cloth strips, and the optional Dremel tool for polishing those difficult-to-reach places.*

In the quest to break away from the pack, and to stand out above the cacophony of pileup signals, the motivated radio amateur might consider focusing on the amplifier tank circuit to reduce inherent RF losses that may often appear at substantial levels of magnitude at higher radio frequencies. The material to accomplish this task is inexpensive, requires no special skill levels or equipment, and—more important—does not require any equipment disassembly. If it sounds like a win-win situation, read on!

Tank circuit conductor losses

Radio amateurs are well aware that a DC current flowing through a conductor distributes itself uniformly throughout the cross-sectional area of the conductor. As a consequence, the ohmic resistance of the wire is directly proportional to the specific resistance of the conductor (data available from *ARRL Handbook* wire tables) and to its overall length; and inversely proportional to the cross-sectional area.

Simply stated, the heavier the gauge of the wire (using the shortest cabling length possible), the greater the current that can be carried through it with minimal losses. On the other hand, RF current does not behave in this highly predictable manner, and the consequences of subtle power losses, as it moves through a conductor, may have escaped the scrutiny of some radio amateur amplifier builders.

Consequently, in the quest to squeeze out more watts from linear amplifiers, RF characteristics remain a hot topic of discussion. The peculiarities of RF's behavior in linear output networks surface as a vital subject to study and master, and the application of this knowledge for circuit improvement is essential to achieve the ultimate high tech in amplifier design.

What is skin effect?

RF current, because of its distinctive behavior as it passes through a conductor, meets additional levels of resistance because of a phenomenon called *skin effect*. This is a result of alternating current inducing voltages in the center of the conductor that repel the flow of electrons outward towards the conductor's surface. This gathering density of electrons moving on the surface, rather than flowing throughout the inductor, in effect reduces the cross-sectional area through which the current flows. As a consequence, the resistance of the conductor is raised, resulting in increases in heat loss.

Skin effect becomes a more critical factor as frequency is increased. As an interesting note, here's the rationale for making RF tank circuits from copper tubing rather than a solid conductor. There is no need for the more

Relative Resistivity of Metals

Metal	Resistivity Compared to Copper
Brass	3.7 – 4.9
Cadmium	4.4
Chromium	1.8
Copper (annealed)	1.0
Copper (hard drawn)	1.03
Gold	1.4
Iron	5.68
Lead	12.8
Nickel	5.1
Silver	0.94
Steel	7.6 – 12.7
Tin	6.7
Zinc	3.4

Table 1. *Relative resistivity of metals, compared to copper.*

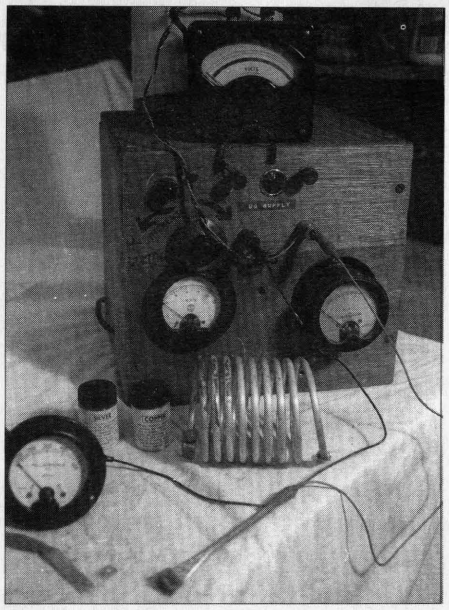

Photo C. *Meet "Double Ugly," my circa-1962 variable home-brew supply (like the battery commercial, just keeps going and going). It provided all the required plating current. Hookup wire included with the kit was replaced with longer alligator clip leads to allow for greater movement. The meters at the top and to the left were temporarily added to the circuit. They provided an expanded scale for a more precise monitoring of the voltage and current. The positive lead is clipped directly to the plating brush. The negative lead passes through the 500 mA meter and is then connected directly to the work being plated. If a bench-type supply is not available, the manufacturer suggests using 2 or 3 #6 dry cells in series for 3 to 4-1/2 VDC (see text).*

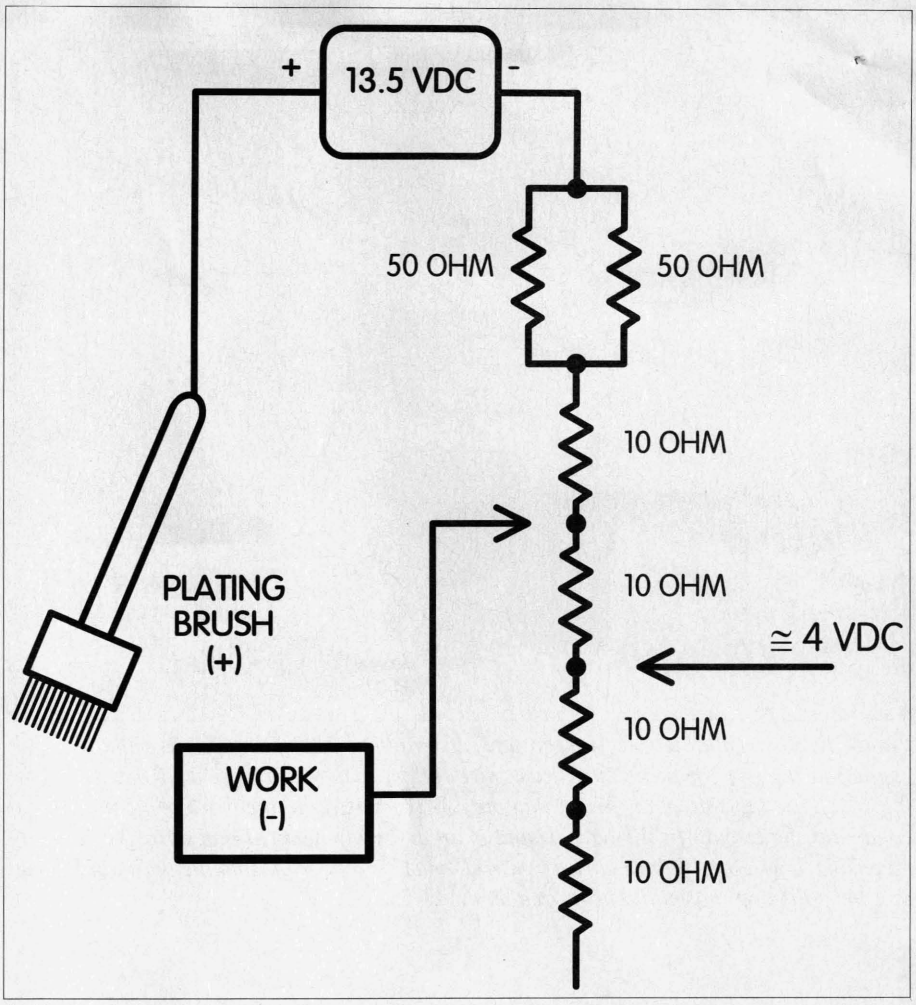

Fig. 1. *Voltage divider.*

expensive and heavy solid rod simply because it does not conduct RF throughout its cross-sectional mass. As a matter of fact, the RF does not travel to any substantial depth below the surface or skin of the conductor.

With that in mind, take a look at the 10–20 meter portion of your linear amplifier tank circuit to verify the builder's awareness of this concept. If the tubing is not evident in at least this portion of the output network, it's time for a major circuit change. If you find a tank circuit containing virgin copper tubing and heavy 8–10 gauge wire (which will most probably be the case), then be sure you finish reading this article.

The case for silverplating

The *ARRL Handbook* chapter dealing with Electrical Laws and Circuits contains a chart listing the relative resistivity of common metals (including gold), and indicates that only silver has a lower resistance to current flow than copper. (See **Table 1**.) The reference value of "1" applied to annealed copper is lower in silver by 6%. Combine this factor with the unique properties of high-frequency RF flowing on the surface of a conductor and it becomes abundantly evident that the silverplating (over copper) of RF tank tubing or wire is a good investment in time and effort. It may breathe some new life into the old rig (as a result of the diminished ohmic losses) and just may net enough extra power, in the competitive DX world of pileups, to gain for you the exalted top-gun status on the DXCC Honor Roll.

Where to begin?

Any attempt to adapt commercial techniques of silverplating for in-home

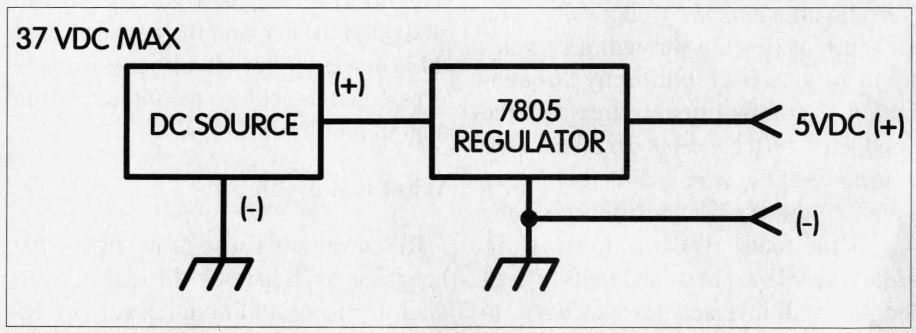

Fig. 2. *Fixed voltage regulator.*

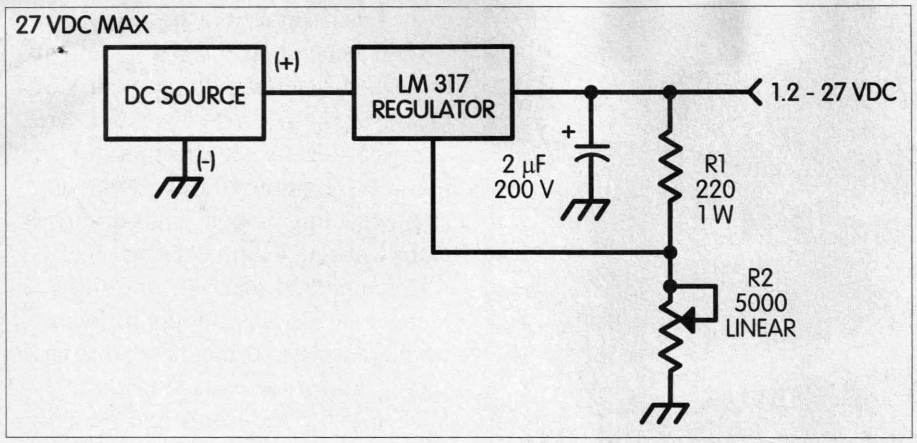

Fig. 3. Variable voltage supply.

use is out of the question primarily because of the complexity of the equipment and the toxicity of the chemical baths. An alternative solution is to purchase a plating kit supplied by a Dallas, Texas, firm that is both inexpensive and uncomplicated to use. All the material, including the chemicals, wire, and clips, is provided as part of the package. All that is needed is a power source rated at 3 to 4-1/2 VDC. The manufacturer recommends two #6 dry cells connected in series (3 VDC) for general plating work. In certain instances, you can simply wire up an additional battery to the string (4-1/2 VDC) for speedier plating on larger areas.

In my case, I used my circa-1962 "Double Ugly" bench variable supply (see **Photo C**). With its output adjusted for about 4 VDC, the process ran flawlessly. Current draw was about 200 mA. The dry cells are OK, but they are expensive and really have no practical value after completing the plating process.

The best deal is to use a bench-type (Astron or equivalent) 13.5 VDC supply, or to connect up to your automobile battery. Use the voltage divider circuit depicted in **Fig. 1** to get the power level you need. Another alternative is to use a fixed voltage regulator (5 VDC) and power from a variety of DC sources (**Fig. 2**). There's always a power cube around from one of the video games, or check the battery pack on your HT or power screwdriver as a potential and renewable (rechargeable) power source. You may also consider a variable voltage regulator (**Fig. 3**) along with any one of the power sources suggested. This inexpensive setup will conservatively provide voltages from 1.2–27 VDC at 1.5 A, and it can have a practical value for a variety of other projects down the line.

What's the trick in silverplating?

Heed the manufacturer's admonition that "plating can only be as good as the surface on which (it's) applied." In the plating of any metal, preparation is easily 95% of the task.

Begin the process by gathering up some brass/copper chemical cleaner, 400-grit emery paper, steel wool, and a supply of stiff-bristled toothbrushes. All of these can be located at the local home center at minimal cost. In addition, you'll need a supply of soft rags (old T-shirts are perfect), a handful of cotton swabs, and possibly a Dremel™ tool fitted with a couple of polishing discs to help get into the tight spots.

Our purpose is not to polish to a mirrored finish. All that is required to prepare for a clean plating surface, with good bonding characteristics, is to thoroughly remove all the copper oxidation. If the surfaces are flat, use the steel wool or 400-grit emery paper. For large areas, use a wire wheel. In tight spots, the chemical cleaner and toothbrush or swab are indispensable.

Make certain there is adequate ventilation in the work area. The best idea is to use the chemical cleaner outdoors, especially if you anticipate it may take some time to complete the cleaning.

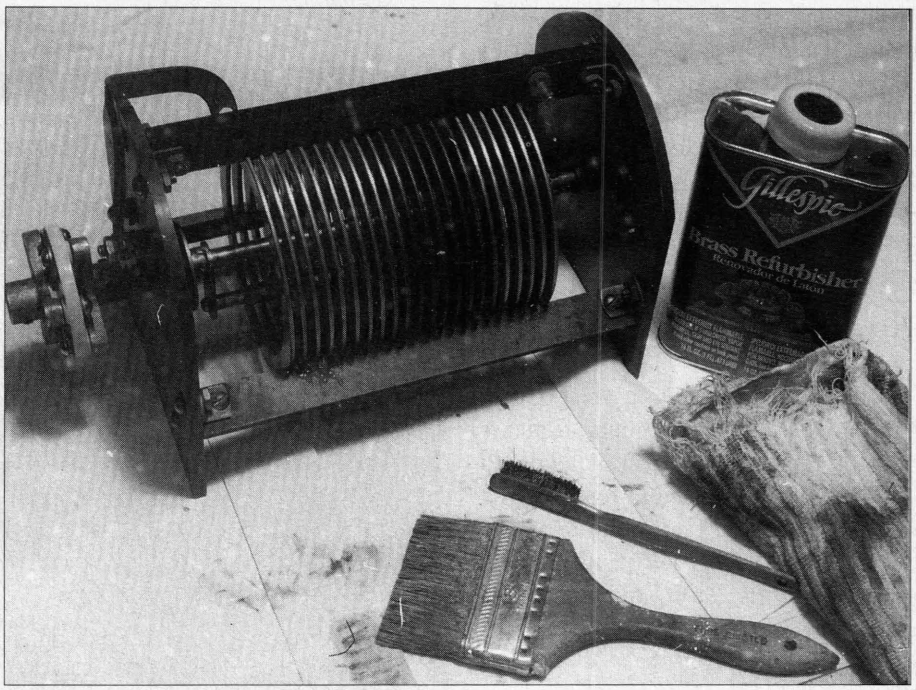

***Photo D.** Because of the difficulty of getting into hard-to-reach areas, a chemical cleaner was used to remove years of oxidation from the super-heavy-duty roller inductor. Note that the six center coil bands have not been cleaned to illustrate the contrast. The chemical was liberally brushed onto the metal. The process is similar to chemical paint stripping. A toothbrush assisted in getting to those hard-to-reach spots. A soft rag (lower right) was essential for removing any residue. The work area must be well ventilated. Working outdoors is highly recommended.*

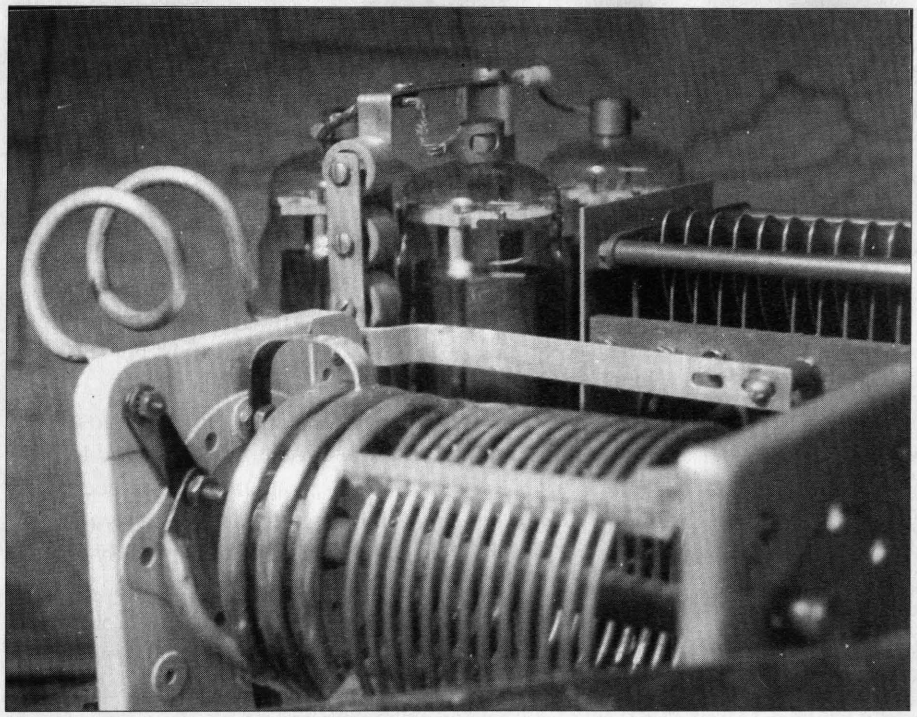

Photo E. *View of a modified "three-hole" 813 linear amp. All the coils, flat copper stock, and flexible coax shielding to the tubes and the air-variable plate-tune capacitor have been silverplated.*

Preparing the rotary inductor (see **Photo D**) for plating was indeed tedious and time-consuming. The work seemed endless and the cleaning progressed slowly, simply because many of the surfaces were difficult to reach. I took the operation outdoors and placed it on newspapers to protect the table from the chemical cleaner. However, the final product was worth the effort and will prove to be one of the vital links in the assembly of a state-of-the-art linear amplifier.

The final step

When you think you've done a yeoman's job on the preparation aspect of the task, go over it again to doubly ensure a clean, residue-free surface. Silver will not bond to an ill-prepared base! You will find that it's extremely difficult to overcome the urge to get going with the plating, but that aspect of the process will come soon enough.

The plating may even seem anticlimactic, since the actual silver application is quite simple and straightforward. It's often completed in a very short time—especially if the component parts are small with little surface area. Use the wire and alligator clips supplied to connect the batteries' minus (-) terminal to one end of the surface to be plated and plus (+) terminal to the brush supplied in the kit.

If the bench power supply you're using is not metered, wire up your VOM or a spare 0–500 mA meter in series with the negative leg to monitor current draw. I preferred using long jumpers with clips at both ends for some extra working length convenience.

I recommend that you make certain there is an adequate supply of fresh air when you plate. If you have a variable supply, adjust the voltage to about 3–4 VDC and dip the brush into the jelly-like compound, making certain that both the bristles and the underside of the anode are continually well-covered with plating material. If your meter indicates an increase in current flow after some plating, it's time to pick up some additional gel from the jar.

It might be a good idea to test your setup and perfect a rhythm utilizing a piece of scrap copper. Use short circular motions with the anode, firmly pressing the bristles to the work. Usually 20–30 seconds over an area will be sufficient to deposit a layer of silver. At regular intervals, renew the supply of plating material by dipping into the chemical container. For

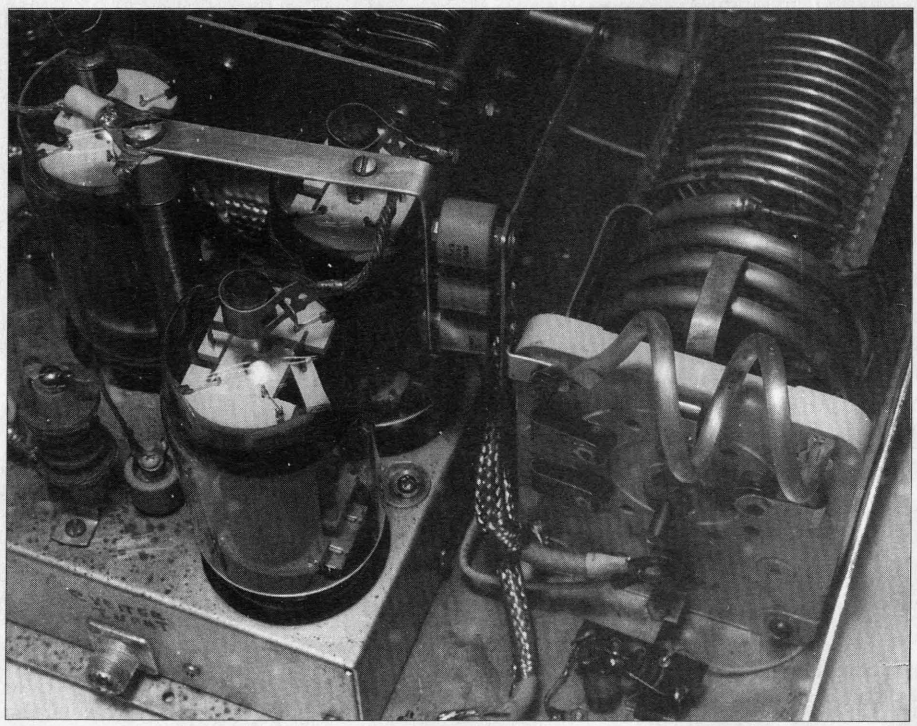

Photo F. *This view of the 813 amplifier shows several silverplated components. The 850-A tank circuit and the 10 meter coil have both been plated. The flat stock connecting the vertical HV plate choke to the three "doorknob" capacitors, and the stock connecting the other side of the capacitors to the tank circuit have been silvered as well.*

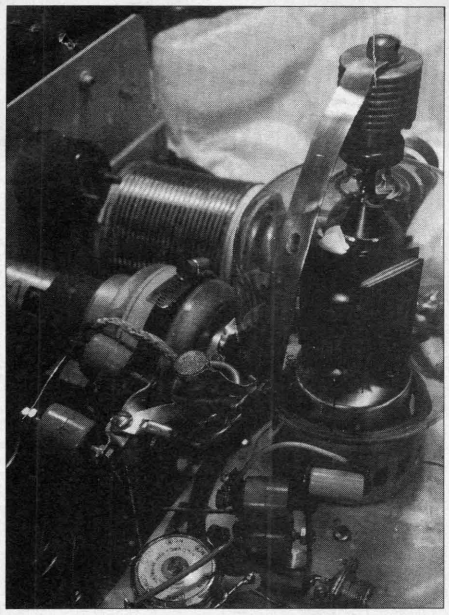

Photo G. *The heavy copper strapping from the 4-1000 A plate cap, the plate parasitic choke, door knob supports, and the 8U coax shielding, which directs RF to the tank circuit and plate-tune vacuum variable, have all been dressed in a new coat of silver.*

heavier plating, slow down the circular motion process to allow more time for the metal to transfer. You may even try experimenting with slightly increased voltages (6–8 VDC) to improve the metal transfer.

When you're done, rinse the surfaces with water or use a soft cloth to wipe the work clean. If there are areas that did not accept the silver because you missed a spot during preparation, don't be alarmed. Lightly polish the spot with the emery paper or steel wool and replate over those sections. Wipe the work area clean.

Use a little household silver polish to brighten up the silver finish and step back to take a good look at your project. You'll marvel at how well the system works and how much compound remains for other plating tasks. Incidentally, the supplier provides a bottle of copper undercoat in the kit if it's necessary to silverplate over steel (nuts, bolts, washers, etc.). When you're through, clean all the implements with water and dry thoroughly.

What else can I plate?

The manufacturer, in addition to providing a silverplating kit, also offers a package of materials to plate both gold and nickel. If you've experienced oxidized contacts with plugs and sockets, you may consider their 24-karat goldplating kit for use in this problem area. Gold is a bit more expensive than silver, but a jar of material should last a long time. Whatever you do, avoid the temptation to plate your tank circuits in gold. The metal resistivity chart should dissuade you from that idea, since ohmic losses for gold are greater than those for copper. It will most certainly look great, but that's about as far as it goes!

A final comment

Keep in mind that everything you do to finesse your electronic circuits results in an increase in radiated power. Perhaps someone may say the theoretical power increase due to the slightly lower ohmic resistance of silver is not worth the time and effort for this undertaking. In response, remember that the boys in the DX pack are very much neck-and-neck in their quest for that new and elusive country and whatever you can do to squeeze out even a couple of watts of power may be all that is necessary to make the difference in the pileup. Give it a try. You'll find it an interesting project. Success to you in both your plating and DXing endeavors ...

A silverplating kit, $16.50 ppd., goldplating kit, $39.00 ppd., and a combination gold/silver kit, $48.50 ppd., are available from:

Texas Platers Supply
2453 W. Five Mile Pkwy.
Dallas TX 75223
(214) 330-7168

For custom transformers/amplifier components, send for a brochure from:

Peter W. Dahl Co. Inc.
5869 Waycross Ave.
El Paso TX 79924
(915) 751-2300

73

ALL ELECTRONICS CORPORATION

3 Volt Lithium Coin Cell with PC Leads

Panasonic # BR2330-1GU
3 volt, 255 mAh coin cell. 0.9" diameter x 0.12" thick. 0.7" between positive and negative pc leads.
VERY SPECIAL PRICE
LARGE QUANTITY AVAILABLE
75¢ each
CAT #LBAT-16
20 for $12.00
100 for $45.00
1000 for $300.00

ELECTRET MIKE

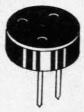

Panasonic # WM 54BT-D
Electret condenser microphone cartridge. Low impedance, omnidirectional mike. 20 - 12,000 HZ. 0.38" dia. x 0.175" high.
CAT #MIKE-36
60¢ each
10 for $5.50
100 for $45.00

Ultrabright LED

PAINFULLY BRIGHT RED LED
2500 to 4000 mcd @ 20 ma. T 1 3/4 (5 mm diameter) red LED. Significantly brighter than conventional LEDs. Water clear in off-state.
CAT # LED-42 2 for $1.20
10 for $ 5.00 • 100 for $45.00
1000 for $ 400.00

2 1/2" 8 Ohm Speaker

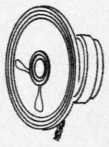

Panasonic # EAS65P76A3
8 ohm 0.4 watt speaker with soft-edge paper cone for good frequency response. 0.93" overall depth. 2.25" wire leads with 2 contact (0.1" spacing) socket connector.
Large quantity available.
CAT # SK-255
$1.00 each
10 for $8.50
100 for $70.00

ORDER TOLL FREE
1-800-826-5432
CHARGE ORDERS to Visa, Mastercard, American Express or Discover

TERMS: *NO MINIMUM ORDER.* Shipping and handling for the 48 continental U.S.A. $5.00 per order. All others including AK, HI, PR or Canada must pay full shipping. All orders delivered in CALIFORNIA must include local state sales tax. Quantities Limited. NO COD. Prices subject to change without notice.

CALL, WRITE FAX or E-MAIL for our *FREE* 96 Page CATALOG
Outside the U.S.A. send $3.00 postage.

MAIL ORDERS TO:
ALL ELECTRONICS CORPORATION
P.O. Box 567
Van Nuys, CA 91408
FAX (818)781-2653
e-mail allcorp@allcorp.com
internet - http://www.allcorp.com/

Wanted!

Stories about all the fun you've been having with Amateur Radio, for possible publication. Write to Joyce Sawtelle at 70 Route 202 North, Peterborough, NH 03458.

Hugh Wells W6WTU
1411 18th St.
Manhattan Beach CA 90266-4025

Return of the Wavemeter

Nostalgia? Fun project? Or both?

Wavemeters date back to almost the beginning of time, or at least it seems that way. They at least date back to the first "receiver" that was used to detect a spark from the first known transmitter.

Although ancient in years of use, the wavemeter was the staple of ham radio test equipment up until the time frequency counters became affordable. Although superseded by counters, the wavemeter is still an important and inexpensive piece of test equipment that shouldn't be ignored.

A wavemeter is an independent resonant circuit that can be used to verify the band at frequencies upon which a transmitter is operating. Being independent, it can be counted upon to provide accurate results, or a "second opinion" in case of a general frequency or band dispute.

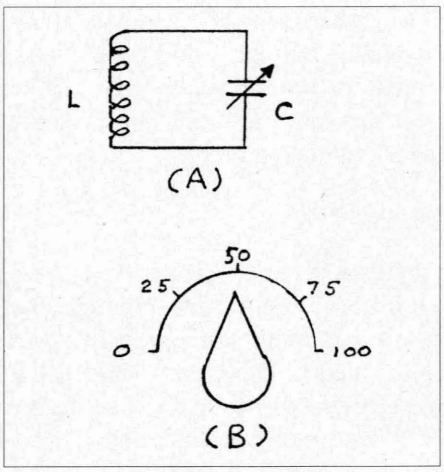

Fig. 1. (a) Basic circuit of a wavemeter. Values for L and C are selected for resonance at the desired band of frequencies. (b) Typical knob and dial used with a wavemeter. Dial is normally calibrated in increments of frequency.

Wavemeters come in many forms, with a few selected types being discussed here, but each performs a similar function — resonates at a given frequency.

Any resonant circuit may be used as a wavemeter to "measure" the band of frequencies upon which a signal is being generated. When coupled to a signal source, it will absorb RF energy at the frequency of resonance. Being a "linear" device, it will not resonate on harmonics of a fundamental signal, unless the fundamental signal is loaded with harmonic energy. Nor will it distort a signal causing the wavemeter to indicate an erroneous frequency.

As a ham, why would you be interested in using or having a wavemeter available? The answer is best left to you as a ham experimenter. However, wavemeters are a "basic" tool that can be used for determining a band of frequencies upon which a signal is being generated. Suppose that you do not have a counter available and you've just built up an oscillator and buffer amplifier. How will you determine the band of frequencies upon which it is operating? You'll need some kind of a detector and a frequency band reference measurement. Of course, if the oscillator is crystal-controlled, you'll know the frequency and the multiplication factors for the desired harmonics. But on which harmonic is the circuit tuned? A wavemeter comes to the rescue because it will respond only to the dominant output harmonic that the circuit is producing.

As you can see from the above example, a counter would probably give you the frequency, and accurately too, but sometimes the counter can become confused when there is too much harmonic energy in the signal or if the

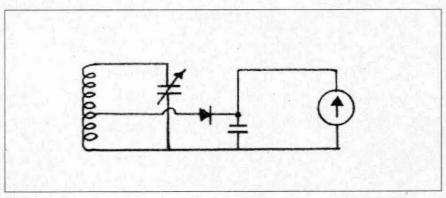

Fig. 2. Wavemeter utilizing a diode detector and a meter to indicate circuit resonance.

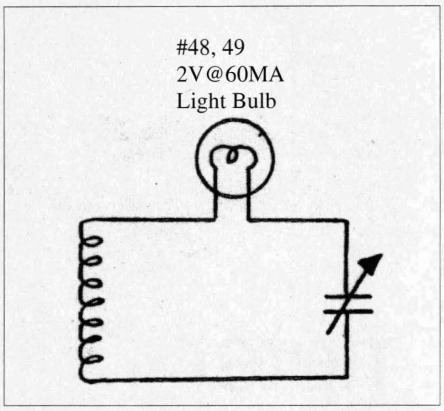

Fig. 3. One of the earliest methods used for indicating resonance of a wavemeter was to employ a light bulb. The bulb's glow was dependent upon the circulating current flow.

level is incompatible with the counter's input circuit. Again, the wavemeter to the rescue as it will pick out the most predominant signal amplitude. The wavemeter provides a second opinion, so to speak, and provides confidence in one's judgment. A wavemeter is a passive resonator and will always "display" the correct band or frequencies should there ever be a question.

Wavemeters come in just about any package and mechanical size that you might consider. An old grid dip oscillator makes a really nice wavemeter when the oscillator has been turned off — and comes with calibration marks, too! There is no limitation to the frequency band where a wavemeter may be operated. Remember, it is only a resonant circuit with the elements tuned to the desired band of frequencies. The basic circuit is shown in **Fig. 1,** and it applies to all wavemeters regardless of size, shape, or material. Also shown in **Fig. 1** is a typical dial that is attached to the wavemeter that can be marked off in increments of frequency.

In use

When a wavemeter is used, it is brought near an active circuit that is to be checked. When tuned to the same frequency as the circuit being tested, energy will be absorbed by the wavemeter and the calibrated pointer will indicate the approximate frequency of the signal being measured.

Sometimes it is difficult to mechanically place the resonant circuit close to the circuit being tested. When that happens, a long coupling link or a short length of coax with a 1–5 turn pickup loop on both ends may be used to couple energy from the circuit being tested into the wavemeter. The caveat of using the coax is that it too can become resonant and create a false frequency indication. Care must be taken to avoid that possibility.

To obtain an indication of energy being absorbed, one of several techniques may be employed. The easiest method is to attach a diode detector to the wavemeter and allow the detected signal current to operate a meter (see **Fig. 2**). The meter will indicate an increase in diode current based upon resonance and the strength of the detected signal. The completed circuit is essentially the same as a field strength meter except that an antenna is not used — although an antenna may be added.

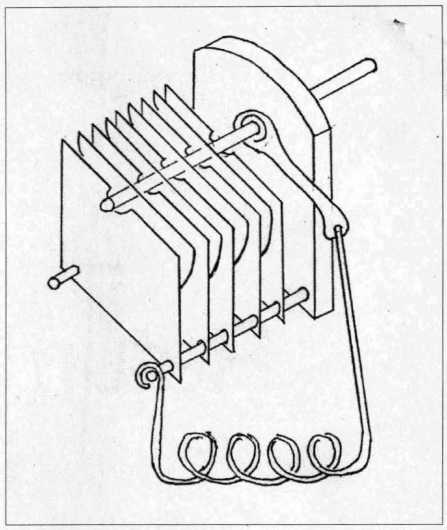

Fig. 5. A coil and variable capacitor connected to form a resonant circuit to be used as a wavemeter. A pointer knob may be mounted on the capacitor's shaft. A calibrated frequency scale may be mounted on the capacitor's mounting plate.

Another method is to detect the signal absorption in the circuit being tested. There is usually some form of metering within the circuit that will indicate when energy is being absorbed from that circuit.

One of the early indication methods used was to place a low current dial light in series with the coil and capacitor (see **Fig. 3**). The light bulb would glow based upon the magnitude of the circulating current within the resonant circuit. In use, the coupling was the least amount necessary allowing the lamp to glow dimly.

Lecher Wires

Perhaps the next oldest wavemeter is the Lecher Wire system shown in **Fig. 4**. It works on the same principle as a coil and capacitor absorption wavemeter except that it is a section of open wire transmission line having a length exceeding about two wavelengths at the anticipated frequency of operation. 300-ohm TV twinlead works well in this application even with the insulation remaining on the wire.

A transmission line is a system of

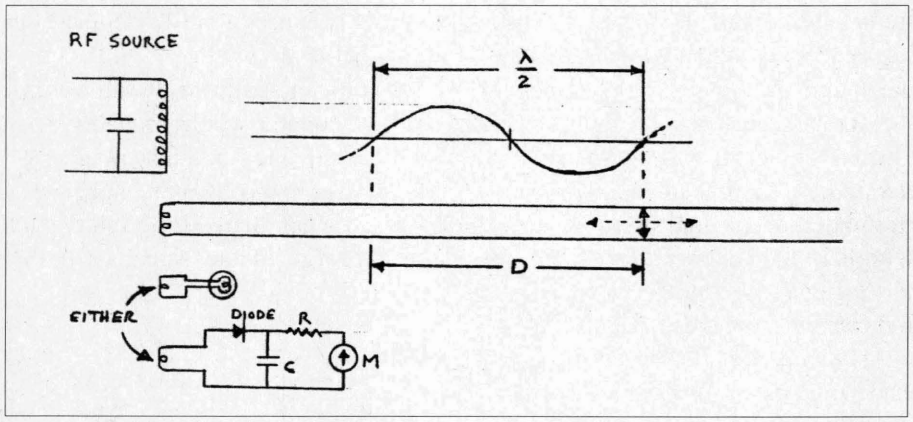

Fig. 4. Lecher Wire system used for determining the relative frequency of a signal source. Detection of the signal null may be done using either a light bulb or a field strength meter. The detector circuit is located on the opposite side of the Lecher Wire pickup loop in order to create the greatest amount of field amplitude change. D in meters: F(MHz) = 150/D. D in inches: F(MHz) = 5905/D.

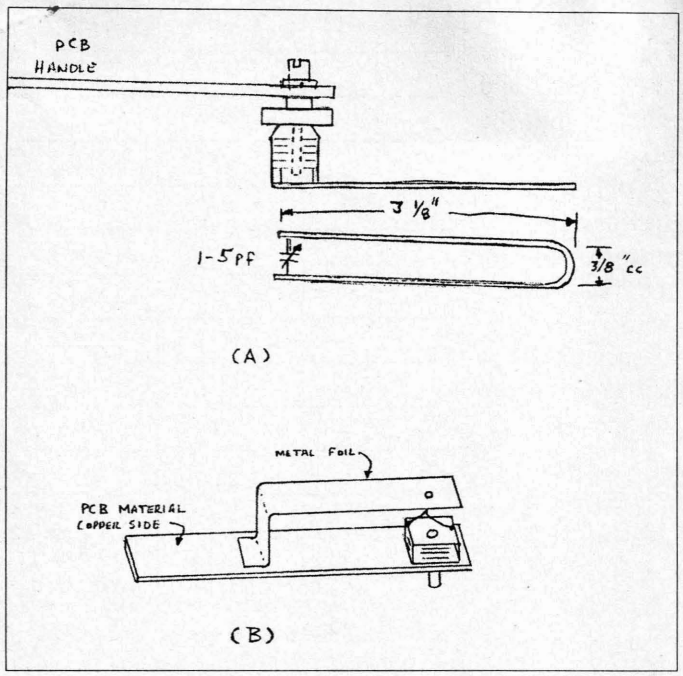

Fig. 6. VHF/UHF wavemeters: (a) Horseshoe resonators made from heavy copper wire (#10-#14) with dimensions shown for the 450 MHz band. (b) Horseshoe resonator made with metal foil mounted on a piece of printed circuit board material.

distributed inductance and capacitance, while the basic wavemeter is lumped inductance and capacitance. The two systems perform the same regardless of their mechanical configuration differences.

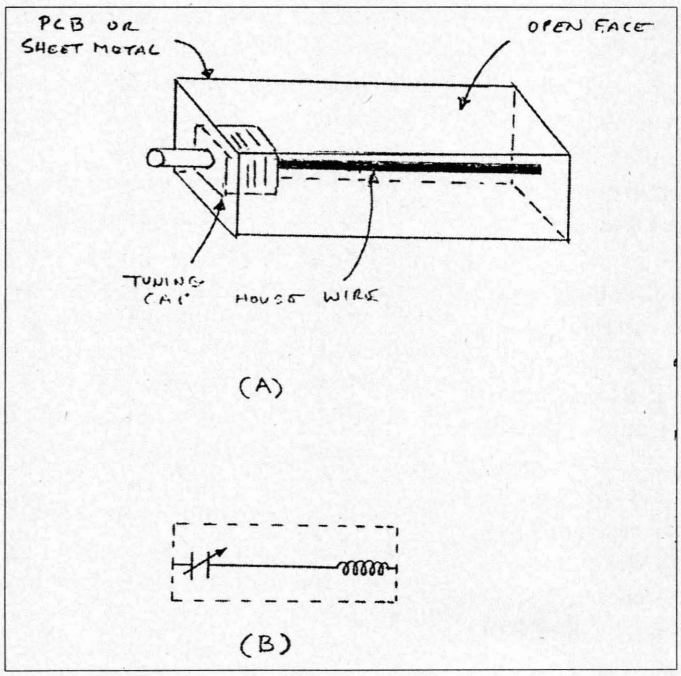

Fig. 7. Pictorial view of a channel resonator used as a wavemeter. (a) A straight wire resonator allowing the circuit to resonate at the highest frequency. (b) A coil may be added to the cold end of the resonator to lower the frequency of a given channel. Notes: Box length contributes to operational frequency. Line length and cap value determine frequency.

One of the advantages of the Lecher Wire system is that it can be utilized well up into the microwave region, though a little tough to use at short wavelengths. Typically, when operating in the microwave region, it is better to shift the configuration to waveguide where small mechanical dimensional changes can be observed/measured more accurately.

Normally, energy on a transmission line is traveling from the source to the load and standing waves on the line are not desirable. In the case of a Lecher Wire system, a short is deliberately placed across the wires to create standing waves. A shorting bar placed across the line is moved along the line creating distinct peaks and nulls (standing waves) on the line. When using TV twinlead, a screwdriver shaft laid across the line functions well as a "short."

By measuring the distance between half-wave length peaks or nulls on the line, one can determine the approximate frequency of operation. Actually, frequency of operation can be determined rather

Continued on page 22

ALL ELECTRONICS CORPORATION

Two Speed Worm Gear Motor

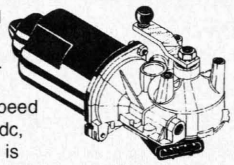

Powerful windshield wiper motor for 2000-2001 Saturn L series automobiles. Two speeds; high speed is 106 RPM at 12 Vdc, 4 Amps. Low speed is 41 RPM at 12 Vdc, 0.91 Amps. 3/8" threaded drive shaft with nut. A 2.25" lever with a universal joint, attached to the shaft, is easily removable. 7" overall length x 3.5" x 4".
CAT # DCM-171 $19.75 each

Rechargeable Battery

Eveready # NH22. Nickel Metal Hydride rechargeable battery. Replaces 9 Volt batteries in many applications. Actual voltage 7.2 Volts. Can be charged in most Nickel-cadmium chargers.
CAT# NMH-9 $3.50 each

Miniature DC Motor

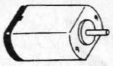

Mabuchi # FF-N20PN
Miniature 1.5 to 3 Volt DC motor. Ideal for modelsand radio control applications where small size is important. No load rating: 15,800 RPM @ 2.4 V, 96 mA. Length (excluding shaft), 0.654" long x 0.47" x 0.39". 0.039"(1mm) dia. x 0.13" long shaft. Solder-loop terminals. Large quantity available.
CAT# DCM-166
2 for $1.50
150 for 60¢ ea.
600 for 50¢ ea.
1500 pieces 35¢ ea.

Solar Panel

Output: approx. 3 Volts @ 40 mA. 2.40" square x 0.13" thick epoxy-encapsulated silicon photovoltaic panel removed from solar lighting system. Solid, almost -unbreakable module with easy-to-solder spots on backside. Ideal for solar-powered battery chargers and other projects.
CAT # SPL-60 $3.50 each

ORDER TOLL FREE
1-800-826-5432
SHOP OUR ONLINE STORE
www.allelectronics.com
CHARGE ORDERS to Visa, Mastercard, American Express or Discover

TERMS: *NO MINIMUM ORDER.* Shipping and handling for the 48 continental U.S.A. $5.00 per order. All others including AK, HI, PR or Canada must pay full shipping. All orders delivered in CALIFORNIA must include local state sales tax. Quantities Limited. NO COD. Prices subject to change without notice.

CALL, WRITE FAX or E-MAIL for our FREE 96 Page CATALOG
Outside the U.S.A. send $3.00 postage.

MAIL ORDERS TO:
ALL ELECTRONICS CORPORATION
P.O. Box 567
Van Nuys, CA 91408
FAX (818)781-2653
e-mail allcorp@allcorp.com

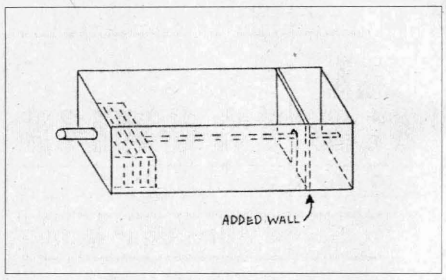

Fig. 8. Channel resonator with an added wall used to shorten up the channel length with the intention of raising the frequency of resonance. The wall must be soldered to the wall and resonator wire to maintain stability.

accurately with Lecher Wires. The equations for determining frequency are shown in **Fig. 4,** with measurements taken in either inches or meters.

Detecting the absorption of energy at the half-wave points can be done in several ways as shown in **Fig. 4,** with the metering technique being the most sensitive. The light bulb technique is perhaps the oldest method used and is effective as long as the signal source generates sufficient energy to light the lamp to a minor brilliance.

Coil and capacitor

The easiest wavemeter to build is one where a coil and capacitor are connected as shown in **Fig. 5**. The table shown provides typical inductance and capacitance values suitable for the various ham bands from 160 meters through 450 MHz.

Mechanical construction of the wavemeter is based primarily upon the selection of a capacitor. The simplest mounting for the capacitor is to fashion a handle using a wooden paddle or a short section of printed circuit board material.

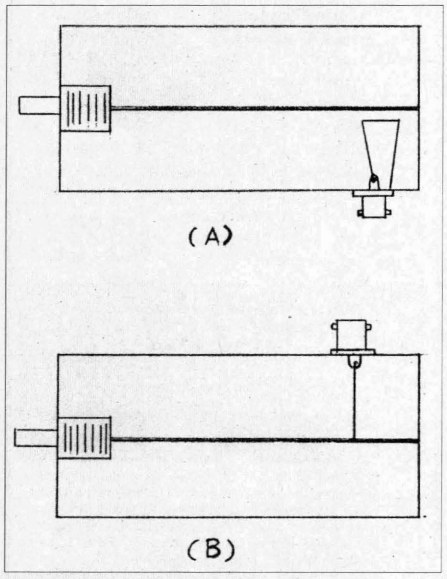

*Fig. 9. Methods for adding a coupling link to a channel resonator. **(a)** Link is coupled to the side of the resonator and is positioned for a desired coupling factor. **(b)** Link is tapped directly on to the resonator. Tap is positioned for a desired coupling factor and impedance value.*

Horseshoe resonator

When operating above about 2 meters, the lumped inductance of a coil becomes small enough such that it becomes mechanically easier to form the inductor into a loop like a horseshoe. The actual circuit then becomes a combination of distributed inductance and capacitance connected to a lumped capacitance. The horseshoe configuration is usable at frequencies from 2 meters up to perhaps 900 MHz. At the higher frequency end, the lumped capacitance begins to hinder the desired operation and shifting to microwave techniques is preferred.

Fig. 6a shows a typical loop soldered to a variable capacitor for use in the 400-500 MHz band. The loop is made of #12–#14 copper house wire, and may be used with or without insulation on the wire. The use of insulation will prevent the loop from actually making electrical contact with the circuit being tested.

Fig. 6b is another form of the horseshoe. In this case, the variable capacitor is mounted onto a section of printed circuit board. The loop portion is a strip of copper or any solderable material that is formed to create a loop as shown. The frequency coverage of this configuration can essentially be from 2 meters to 900 MHz. The frequency of operation is dependent upon the capacitance value and the length of the "loop."

Channel resonator

The channel resonator is an interesting wavemeter because of the construction as shown in **Fig. 7**. It is an adaptation of a quarter-wave coaxial resonator. Depending upon the resonant line that's used, the channel can be resonated from about 6 meters up to 900 MHz. Electrically, the length of the wire line is equal to a quarter-wavelength at the operating frequency. Physically, the mechanical length is much shorter and is controlled by the lumped capacitance and the length of the channel. The actual tuning bandwidth for a single resonant line (channel) is limited to perhaps one or two bands such as 220-450 MHz.

F (MHz)	C (pF)	L (µH)
2	175	40
4	90	18
7	50	11
10	35	7
14	26	5.5
17	21	4.5
21	17	3.5
29	13	2.6
51	7	1.4
146	2.6	0.7
222	1.6	0.35
445	0.08	0.17

Table 1. Approximate values of capacitance and inductance shown for resonance of a tuned circuit for each of the ham bands indicated.

Construction of the channel resonator is simple. A variable capacitor is mounted at one end of the box and with a wire, or coil, connected between the capacitor and the opposite end of the box. The box material has a metal interior with one broad side left open. Printed circuit board material is easily worked and can be soldered on the inside to form a metal box. The exterior may or may not have copper, as the circuit is dependent only upon the interior metal wall. Yes, an aluminum box will work as long as one side is left open for a wavemeter application.

Fig. 8 shows a simple technique for changing the band of frequencies covered by the device. Adding a movable wall on the far end of the wire line, the frequency of operation can be increased. For the frequency response to

remain stable, the wall and center wire must be soldered in-place because the circuit is dependent upon the circulating current path within the walls of the box and the wire.

Coupling to the channel resonator is done by holding the open side of the box close to the circuit being tested. Should the close proximity of the box to the circuit become cumbersome, an alternate coupling method may be employed.

Fig. 9 shows how a coax connector may be mounted in one wall of the box or at one end to provide coupling access. A wire loop is placed in close proximity to the resonator and is used for coupling a signal into the resonator. A loop (link) of wire may be used as shown in **Fig. 9a** when the connector is mounted in the wall.

Moving the loop closer or farther way from the center wire will control the amount of signal coupling.

As an alternative coupling method, a connector may be mounted on the side of the box as shown in **Fig. 9b** with a direct tap to the resonator wire. The amount of coupling is controlled by the placement of the tap onto the center wire. The link position should not be placed higher than about 1/4 the length of the wire up from the "cold" end. The matching impedance at the approximate 1/4 position is near 50 ohms and will be less as the tap position is moved toward the "cold" end.

Conclusion

Even though wavemeters have been around for a great many years and come in a wide variety of shapes and sizes, they are still a great standby piece of test equipment. A ham who experiments with circuits should always have a wavemeter available for that "one time" when it is most needed.

Please build up a wavemeter or two and experiment with them. In doing so, you'll develop an appreciation for what they can do for you. 73

Say You Saw It In *73!*

ADI · ALINCO · AMERITRON · MFJ · ICOM

www.amcominc.com

Toll Free Orders: 1-888-803-5823

Am-Com, Inc. ClearSpeech® Speaker

This easy-to-use DSP speaker activates automatically and filters 95% background noise, static and other interference.

- Improves clarity & intelligibility
- Continuous, adaptive removal of background noise
- Listen with less fatigue & greater concentration
- Improves signal to noise ratio
- Engineered for use with amateur radios
- Speaker output jack

$149.95 plus S&H (Reg. Price $179.95)

Am-Com, Inc. ClearSpeech® Base

You asked for it. The unique digital noise canceling technology of the popular ClearSpeech® Speaker, but without the internal speaker. Removes up to 95% of noise from received audio.
Use in-line with your favorite base station or mobile speaker.

3"X1"X5.5"
$149.95 plus S&H (Reg. Price $179.95)

Your One Source Amateur Radio Dealer. Best Icom Radio Prices Guaranteed.

Email: **amcom@digisys.net**

Mail Orders To: **Am-Com, Inc., 100 Bierney Rd., Suite C, Lakeside, Montana 59922**

MIRAGE · EMET · LA CROSSE TECHNOLOGY · YAESU · hy-gain

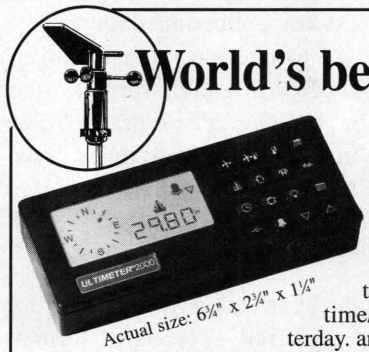

World's best ham weather station*

The ULTIMETER® 2000 tracks more than 100 values so you can monitor and record weather extremes in your area.

Instant access to: • current values • today's highs and lows • long term highs and lows • time/date for all highs/lows • rain totals† for today, yesterday. and long term • alarms, and much more. Easy to install.

• Connect data output directly to TNC for APRS weather station.

Features superbly accurate: • barometric pressure • 3-hr. pressure change • indoor/outdoor humidity† • dew point† • wind speed/direction • indoor and outdoor temperature • wind chill temperature • rainfall†.

Only $379 plus shipping (†Optional sensors add'l.) Other ULTIMETER models starting at $189.

*Even *WeatherWatch* magazine concludes "the best we have seen."

The Weather Picture®

An eyepopping add-on to your ULTIMETER

The most popular accessory for our precision weather systems, **The Weather Picture®** continuously displays all the vital weather data you've pre-selected from your ULTIMETER® Weather Station. Big red numerals are easy to read from across the room, day or night. Available in two sizes, in brushed aluminum, traditional oak, or solid teak.

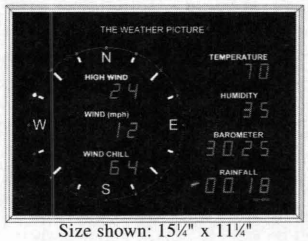

Size shown: 15¼" x 11¼"

Call TOLL-FREE: 1-866-364-7338 FAX 407-892-8552

PEET BROS. COMPANY, Inc. 31 E. 17th Street, St. Cloud FL 34769

Our 26th Year

© 2001 Peet Bros. Co.

Visit our Home Page to see and *actually try* our Weather Stations:
www.peetbros.com

Radar Detector to Microwave Receiver Conversion

Listen on 10 GHz, cheap.

by Steve J. Noll WA6EJO

The abundance of so-called "police radar detectors" made me wonder if these devices might have a useful application for the amateur microwave experimenter. These self-contained receivers are designed to detect police speed-measuring radar energy around 10.525 GHz (also 24.125 GHz in K-band), just above the 10.0 GHz–10.5 GHz Amateur Radio Service allocation.

Although there are plenty of these devices on the market, many of them are expensive for experimenting with. However, C.O.M.B. Company had been selling the BEL XKR series detector for very reasonable prices. I just couldn't resist! (The C.O.M.B. Company is located at 1405 Xenium Lane N., PO Box 32, Minneapolis MN 55440-9176. Tel. 800-328-0609 or contact BEL-Tronics, 20 Center Dr., Orchard Park NY 14127. Tel. 716-662-0522.)

I opted for the BEL XKR-IX Micro-Eye model although any of the XKR series should be similar. The Micro-Eye is a dual-conversion superheterodyne X-band and K-band detector. Although this article applies specifically to this particular model, other modern detectors may be usable, too.

Inside the Micro-Eye

The Micro-Eye is housed in a 1.25" x 4.25" x 4.5" two-piece plastic case. Opening the case proved to be the most difficult part of the entire project! It's glued shut. Careful and persistent prying with a knife will separate the halves to reveal the high-quality electronics inside.

The detector's circuitry is divided between two printed circuit boards. One board contains the controller section of the detector (not used for this project). The other contains all of the RF circuitry and a horn antenna. These two boards conveniently plug together via a 6-pin connector. See Photos B and C.

The controller printed circuit board contains a couple of comparator ICs (MC3302 and LM393), an LM358 dual op amp, and a 78L05 voltage regulator. A custom controller chip appears in the center of the board. About 60 discrete components round out the circuitry.

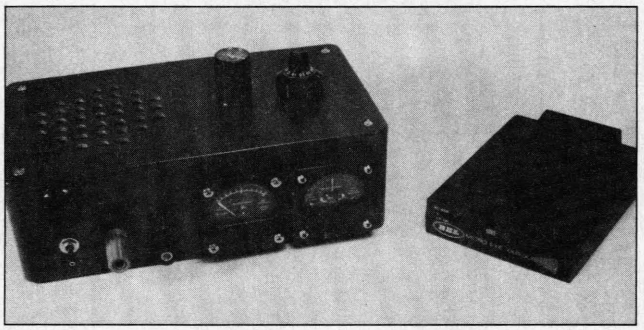

Photo A. The finished product (left) and the original radar detector (right).

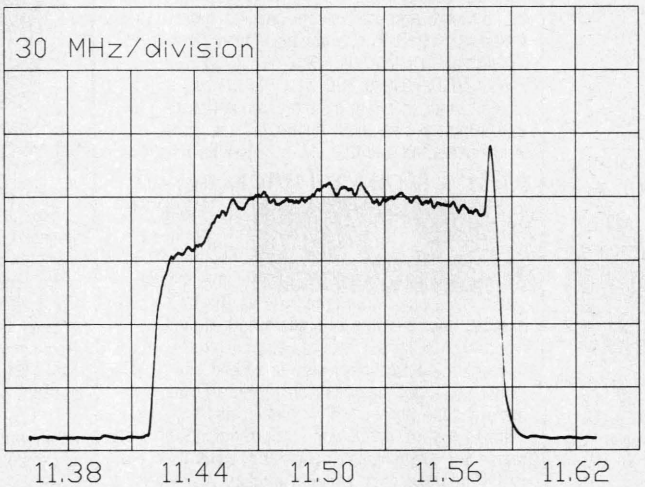

Figure 1. This plot shows the detector's VCO sweeping from 11.4 GHz to 11.6 GHz.

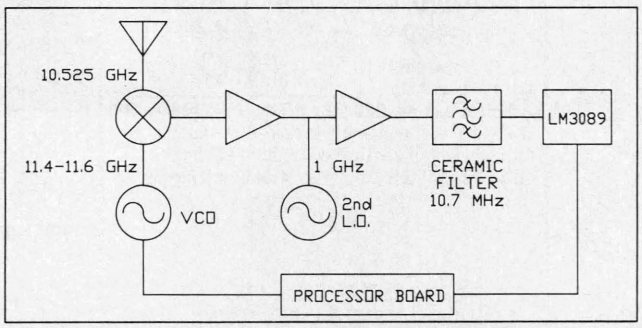

Figure 2. Block diagram of the radar detector.

Metalized, molded plastic covers most of the RF circuit board and forms three sides of the horn antenna. The circuit board itself serves as the fourth side. Some sections of the metalized plastic also provide shielding for the microwave circuitry. A dozen screws fasten the plastic cover to the circuit board. Photo B shows the detector's RF circuit board and metalized plastic horn.

Removing the cover reveals that the microwave circuitry is actually on a third daughterboard, previously hidden underneath (see Photo C). The tiny dimensions of the etched microstrip lines testify to the very high frequencies involved. There are two SOT packaged transistors and a mixer diode in a "beam-lead" package. The mixer diode is incredibly small—only about 0.01" square! Use great care when handling circuit boards with such minuscule devices.

How It Works (More or Less)

Of course, the radar detector instructions didn't include a schematic or theory of operation. Snooping, just plain guessing, and a spectrum analyzer helped me ascertain how this device worked, and whether it could be useful to the microwave experimenter.

Experience dictates that if this is a superheterodyne receiver, it may well radiate some of its local oscillator('s) energy. And sure enough, it does. I pointed a small X-band horn on the input of the spectrum analyzer (a Hewlett-Packard 8551B with a 8441A pre-selector) at the horn of the radar detector and picked up a weak signal sweeping between 11.4 GHz and 11.6 GHz (see Figure 1). The sweep rate was about 40 hertz, but it turns out that this was not the only local oscillator involved.

If this device is meant to receive signals around 10.525 GHz, then there may well be an IF between 11.4 GHz minus 10.525 GHz, and

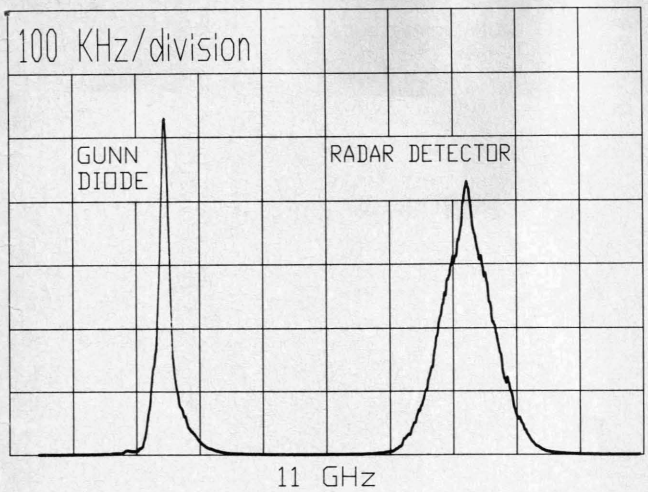

Figure 3. A comparison of the radar detector's VCO stability to that of a Gunn diode oscillator.

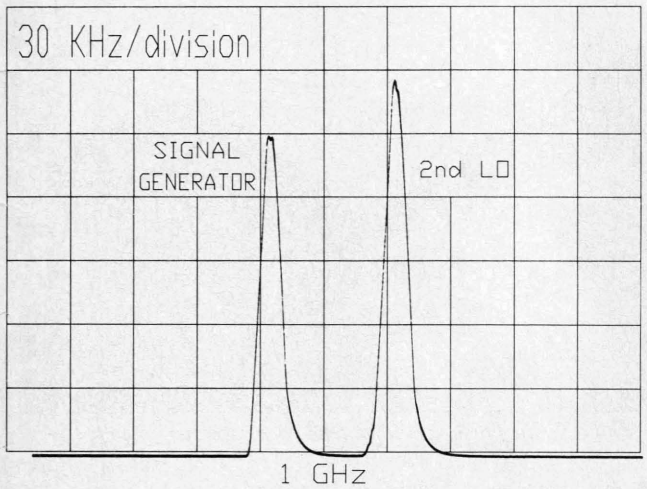

Figure 4. A comparison of the radar detector's second LO stability to that of a signal generator.

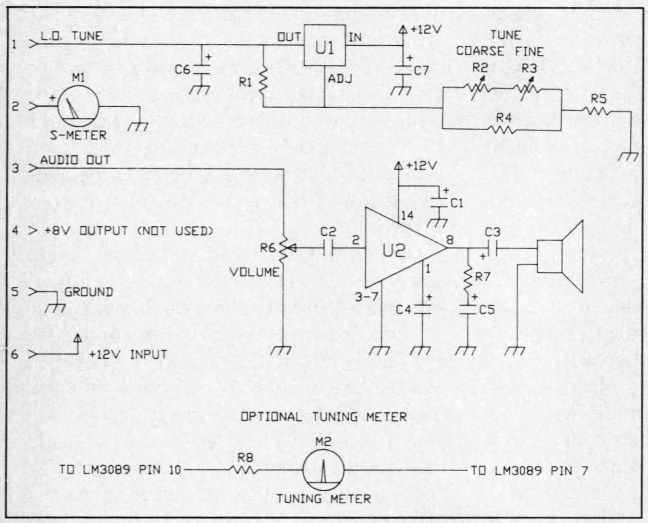

Figure 5. Schematic of the new circuit board.

11.6 GHz minus 10.525 GHz. "Sniffing" around the circuit board with the spectrum analyzer revealed a strong signal at about 1 GHz. This "second LO" signal was not swept in frequency.

Further examination revealed a welcome sight: a standard LM3089 FM Receiver IF System chip! Now here is something familiar with a 10.7 MHz input, an audio output, along with provisions for an S-meter and AFC. The input of the LM3089 is preceded by a 10.7 MHz ceramic filter which in turn is preceded by a couple of what appear to be microwave transistors. The first transistor amplifies the 1 GHz signal from the microwave circuit board and passes it on to the second transistor, which is also fed by the 1 GHz second LO, mixing the received signal down to 10.7 MHz (see Figure 2 and Photo C).

The 1 GHz second local oscillator is a TO-92 packaged transistor, while the first LO is comprised of the two SOT packaged transistors on the microwave daughterboard. This first LO, of course, is actually a VCO (Voltage Controlled Oscillator.)

Actually, the VCO probably generates RF at a lower frequency, the 11 GHz being harmonically generated in the mixer diode. With so many signals, and their possible mixes, it's hard to be sure even with the aid of a spectrum analyzer. The VCO/mixer diode combination also probably generates signals from 22.8 GHz to 23.2 GHz for the reception of K-band speed radars. The sweeping of the first LO frequency is probably done to make sure that any and all signals in the two radar bands are detected, and to make critical RF stage alignment unnecessary. A clever approach.

Modifying the Detector

The presence of the LM3089 FM IF chip hints that the radar detector might be easily adaptable to reception of Amateur Radio Service 10 GHz FM signals, such as those generated by M/A-Com Gunnplexers or Solfan transceivers. Two things still must be done: 1) Stop the first LO from sweeping and make it tunable. 2) Determine if the two LOs have sufficient purity and stability.

It turns out to be quite easy to accomplish

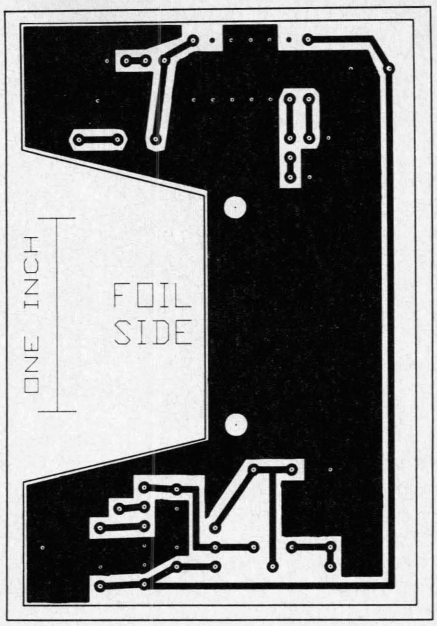

Figure 6. Foil side of the PCB.

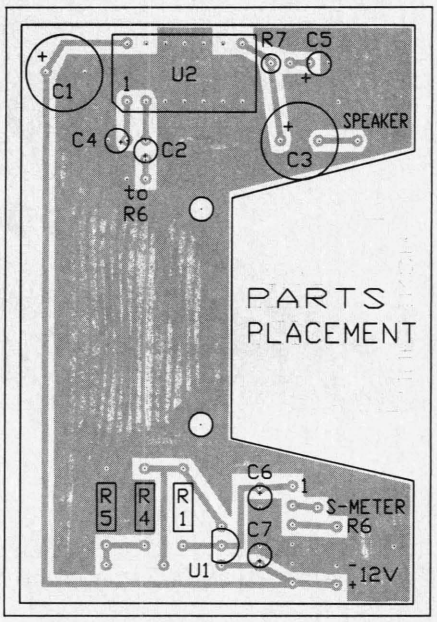

Figure 7. Parts layout.

the first item. The first LO is powered through one of the pins of the 6-pin connector that connects the RF and controller boards. If that pin is bent so that it doesn't mate with the connector, a variable bench supply can be hooked to it. In my unit, a 3.64 volt DC input made the VCO generate 11.5 GHz, while 5.9 volts yielded 11.0 GHz. The VCO drew only about 1 mA.

To check for purity, I observed the first LO signal on the spectrum analyzer side-by-side with a signal generated by a Gunn diode oscillator tuned a few kHz away. Although a Gunn diode signal might not be considered a paragon of purity, it does provide a valid guide, especially since the radar detector will be receiving Gunn diode signals in its new life. Figure 3 shows the result. The first LO signal on the right is much broader than the Gunn diode signal on the left. This is not good.

Note that the significant "pulling" effect of moving one's hand in front of a Gunn diode

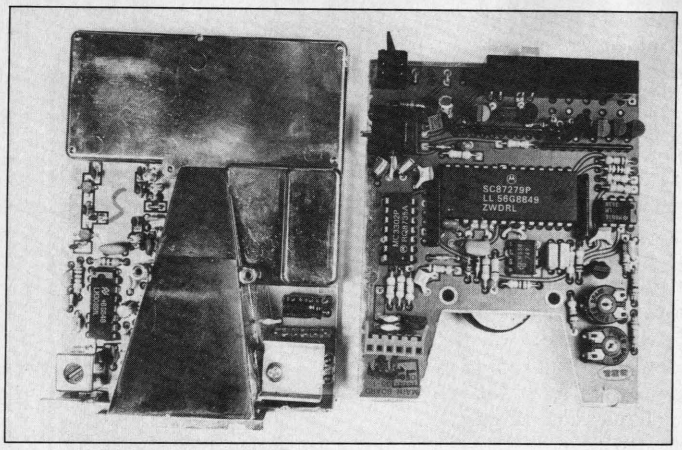

Photo B. Inside the radar detector. RF board on the left. Controller board (not used) on the right.

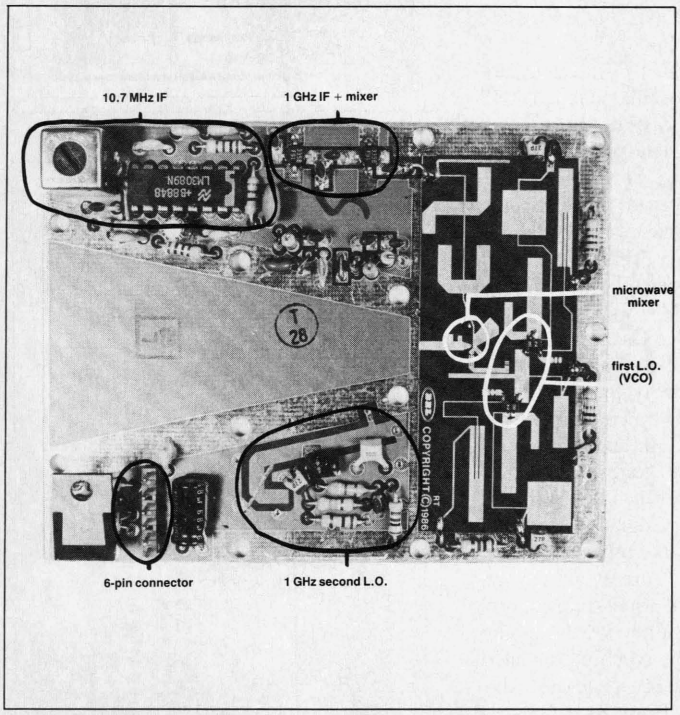

Photo C. A close-up of the RF circuit board after the plastic cover has been removed.

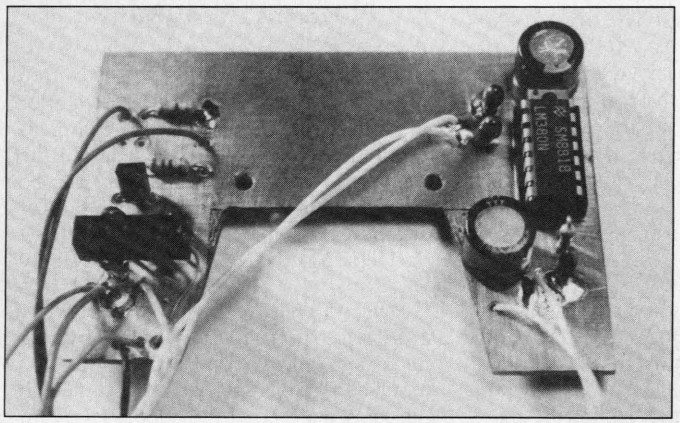

Photo D. The component side of the new printed circuit board.

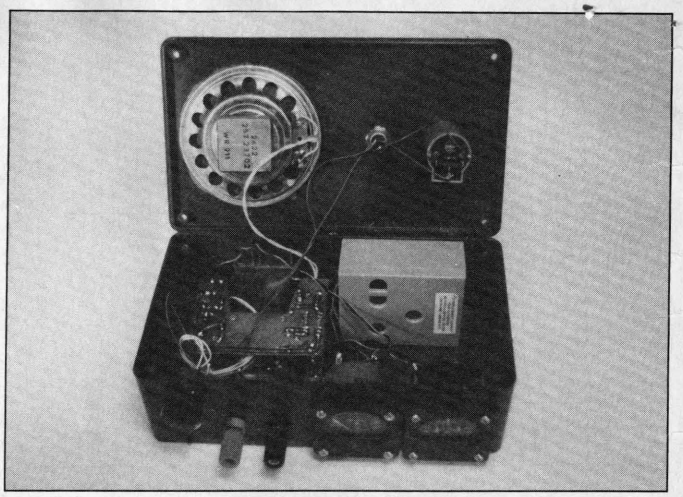

Photo E. The finished unit with the cover open.

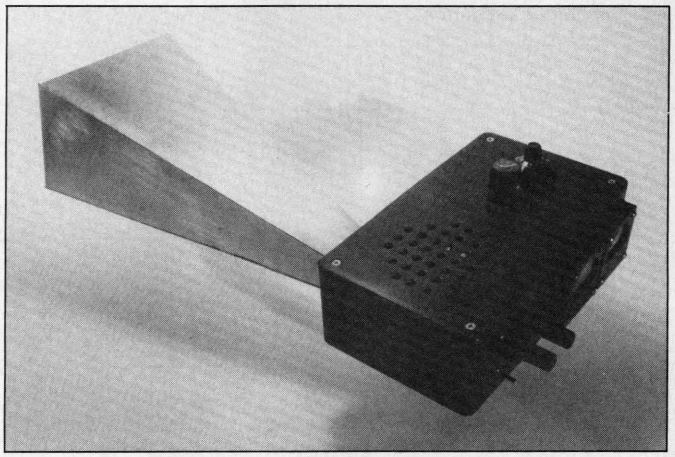

Photo F. The finished unit with the horn extension installed.

transmitter horn is absent in the radar detector. The first L.O. is noisy, but reasonably stable.

The 1 GHz second LO signal is much more acceptable. In Figure 4, the 1 GHz LO signal (right) is identical to the signal from a TS-419/U signal generator (left).

At this point we know that the radar detector can receive FM signals due to the presence of the LM3089 IC. Also, it can be tuned to receive in the amateur portion of X-band by powering the VCO used as the first LO with a variable power supply. The question remaining is whether the first LO signal is good enough to receive clear signals from the kinds of transmitters most amateurs presently use on microwave. The easiest check is to just try it.

Checkout

I have had an X-band beacon in continuous operation from a local mountaintop for some 10 years (see my article, "X-band Beacons," in the January 1987 issue of *Ham Radio*). Reception of a familiar, real-world, "known" signal from this beacon would prove the capability of the radar detector.

I rigged up a perfboard circuit with an LM317 variable voltage regulator and an audio amplifier (see Figure 5). This perfboard replaced the detector's controller circuit board. The LM317 circuit used a 10-turn pot for voltage adjustment. This circuit was designed to cover 3.64–5.9 volts, or 11.0 GHz–11.5 GHz, out of the VCO. The audio amplifier, an LM380, was connected to the audio output of the RF board's LM3089. Time for a DXpedition!

At a convenient location near my house, about 10 miles from the beacon, I can get a solid signal. I parked there and just pointed the modified detector through the car window and slowly turned the 10-turn pot—and there was the beacon's MCW ID signal! It wasn't strong, but it was surprisingly stable. And this is using only the radar detector's tiny horn for the antenna. I was sold on the fact that a modified police radar detector should make a great microwave bench-servicing tool and portable field-test receiver.

Further tests performed on the bench revealed that the modified radar detector produced usable audio when receiving signals from my M/A-Com Gunnplexer transceivers. It was also sensitive enough to pick up the 10 GHz calibration signal of a 1N23 diode driven by a 2 meter handheld (see "X-band Calibrator" in the April 1981 issue of *Ham Radio*).

The Final Design

The next step is to tidy up the circuitry, especially the added audio amplifier. Perfboard is not a good medium for high gain amplifiers of any frequency. A printed circuit board's solid groundplane helps keep unwanted oscillations and feedback under control (see Photo D and Figures 6 & 7). Two 10-turn pots with counting dials are very desirable for tuning the VCO. One, R2, serves as coarse tune. The other, R3, is fine tune. R4 and R5 set the range of voltage available. The values shown allow tuning through the entire amateur X-band (10.0 GHz–10.5 GHz).

These values may have to be adjusted to each particular Micro-Eye receiver. Be sure to test the final circuitry before plugging the new circuit board into the radar detector RF circuit board. Note that microphonics, or vibration-induced feedback, may be introduced if the speaker is mounted too close to the molded plastic shield. An S-meter, a zero-center tuning meter, and a frequency meter are optional add-on's.

The new circuit board can use the 6-pin connector that was removed from the unused controller circuit board. The optional zero-center tuning meter wires directly to pins 7 and 10 of the LM3089. The result is a circuit board that plugs into the Micro-Eye RF board, replacing the original controller board.

Packaging is up to you. I found that everything, including a NiCd battery, fit nicely in a 7″ x 4″ x 3″ plastic box (see Photo E).

Parts List

Capacitors, all 16 WVDC or better.	
C1	25 µF electrolytic or tantalum
C2	0.1 µF
C3	100 µF electrolytic or tantalum
C4	4.7 µF electrolytic or tantalum
C5	0.1 µF
C6	1 µF electrolytic or tantalum
C7	1 µF electrolytic or tantalum
Resistors.	
R1	220 ohm ¼-watt fixed
R2	1k 10-turn pot (coarse tune)
R3	100 ohm 10-turn pot (fine tune)
R4	680 ohm ¼-watt fixed
R5	390 ohm ¼-watt fixed
R6	10k pot (volume)
R7	2.3 ohm ¼-watt fixed
Semiconductors.	
U1	LM317L variable voltage regulator
U2	LM380N audio amplifier
Miscellaneous.	
M1	S-meter, 100 µA movement
1	6-pin connector (remove from unused controller circuit board)
2	ten-turn counting dials
1	8 ohm speaker
1	PC board

Note: A blank PC board is available from FAR Circuits, 18N640 Field Court, Dundee IL 60118 for $6 + $1.50 shipping/handling.

Optional, for center-tune meter.	
M2	100 µA zero-center meter
R8	4.7k ¼-watt fixed

Horn Antenna Extender

The Micro-Eye presents a bit of a problem if you want to change the antenna. Its antenna is rather closely integrated into the entire RF board design. You don't have a handy coax connector or waveguide flange to hook things to. Its horn does work quite nicely, and would probably make a satisfactory feed for a 1′ to 3′ dish.

As an experiment, I made an extension to the integral molded horn, fashioning it from double-sided copper-clad printed circuit board. The extension sleeves inside of the existing horn (see Photo F).

Remember: *You must be very careful not to touch the mixer diode located inside of the horn!*

This extension adds an estimated 8 dB of gain. Field tests verified a marked improvement in signal strength.

You could try modifications I didn't attempt, such as adding an AFC (Automatic Frequency Control), or replacing the horn antenna with an adaptor to a standard waveguide flange or coax connector. The latter modification would allow measurement of the noise figure of the receiver.

The BEL Micro-Eye police speed radar detector is easily modified for reception of the 10 GHz ham band. The cost is low and the performance is quite respectable. This device should serve as a useful accessory for the microwave amateur. 73

You may contact Steve J. Noll WA6EJO at 1288 Winford Avenue, Ventura CA 93004-2504.

Computer Controlled Ham Shack for personal or club system
New Simplex option, operate patch & remotes via repeaters!

Ultra Comshack 64 Duplex/Simplex Controller

HF & VHF Remote Base*Autopatch*CW Practice*Rotor Control *Voice Meters*Paging*Logging*Polite ID's*Packet Voice B.B.S.

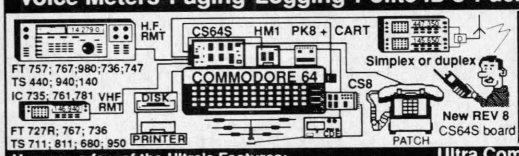

Model CS64S
REV 8....$379.95
Includes: C64 Interface, disk, cables, Manual
Add $5.00 S/H USA
CA. address add 6.25%
Ask for free catalog!

Here are a few of the Ultra's Features:
Operate duplex or Simplex Load, save, change all from T.tones, Packet, or modem* Unlimited voice vocabulary *Voice clock executes events Daily & Weekly *"Super Macros" user programming language! *300-4 digit user access codes *Disk & Printer logging of all telephone numbers dialed, usage time, functions *18 Rotating Polite ID's* 16 External relay controls* 2, 5, & CTCSS Tone Paging* CW Practice with voice *Security mode, T.tone mute* Voice announced user call sign when logging on* Voltage proportional courtesy beeps gives indication of signal strength * 18 rotating Polite ID tails* Safety timers & overrides *"Ultra Link" provides T. tone control from remote audio monitored *User defined multi-tone courtesy beeps each mode*Modem or Packet control* 9 T.Tone Macros store 28 digit command strings *2 Talking Meter inputs * Packet or Modem data* **Autopatch & Reverse** Store 1000 (18 digit) tel. #'s *Quick dial & quick answer * Directed & general page*50 tel #'s restricted patch *Telephone control input* Regenerated touchtones *Autopatch auto off, detects calling party hangup*Pulse or touchtone dial *Call waiting & auto redial* **H.F. & VHF Remotes** *Dual H.F. & VHF SQ. det *Scan up/down;100Hz step + variable scan rate *Monitor mode defeats PTT*Lock mode allows T. tones to TX through remote *Auto mode & split select *9 Scan memories store Mode, splits, VFO A & B *Talking Meters; Voltmeter * Voice & CW Beacon *Voice Rotor control* User selectable courtesy beep

Ultra Com Shack 64 Options
*Mount All modules including C64, Predrilled & painted incl mounts & cable clamps **ALBX** .....$ 159.95
*Digital Voice Recorder 32 or 64 sec. voice Mailbox & ID tail, Inc. 1 Meg Ram, control with CS8 or PK8, Incl. cable for REV8 Ultra board, 5 or 12VDC **DVM...$ 179.95**
*Operate C64 & 1541 from 12Vdc with this crystal controlled Switching supply, runs cool & efficient draws <1 amp, Plugs into C64, fused, protected Model **DCPS.....$ 129.95**
*Add duplex Control of Remotes & patch with Telephone amplified hybrid, null & gain pots Plugs into CS64S board, **TLCN.... $159.95**
Autoboot EPROM cart plugs into C64 or PK8, disk or System version **CART... $ 109.95**
8 relay On/Off; Inc. 3 -DPDT 2 A. relays +5 Sw. outputs, Use with HM1 to rotate beam.....**CS 8.....$ 99.95**
2 Voice Meters + 2 Alarm Inputs + 8 Relay On/Off Sw.. **PK8.....$159.95**
*PK1 adds Program & Control of Ultra via Packet or Tel line + Packet to Voice BBS, Req. 2nd C64 & PK8, Inc. 4 ft. data cable to PK8.....**Pk1...$99.95**
*Rotor control Analog to digital converter; use with CS8; voice bearing +/- 5 deg. for all rotors **HM1..$ 69.95**
Ultra Com Shack 64 Manual all schematics, diagrams, how to operate& set up remote base. Refund with purchase of CS64S **MN.$25.00**

AUDIO BLASTER™ Works in all H.T.'s
AB1S <--Minature Audio Amp/ Used by police
Module installs inside all H.T.'s; 1 watt audio amp ! When it needs to be loud! Universal installation diagrams **AB1S.... $ 24.95**

TSDQ **QUAD**
TSDQ 4 DIGIT Touchtone Decoder
QUAD Relay Expansion plug-in option
TSDQ use as Repeater On/Off, C64 reset. 8/20 VDC ; audio in; Field Program 50,000 Codes; Mom. & Latching; Inc. DPDT Relay; LED digit valid & latch; 24 Pin connector. **QUAD option** adds: four 2 Amp. relays + 5 digit on & off code for each relay. 2"X3"
Expandable TSDQ..$ 89.95 Optional QUAD...$ 99.95

Touchtone to RS232 300 Baud Interface "Decode-A-Pad"
T.tones Input
Use with all computers
Decodes 16 touchtones
Includes Basic program
Use with any terminal program or write Your own, easy to use!
IBM Mac C64
DAP2 $99.95

*Mastercard*Visa*Amex*Disc
ENGINEERING CONSULTING
583 CANDLEWOOD ST.
BREA, CA. 92621
Tel: 714-671-2009 Fax: 714-255-9984

GAP Airwaves expands its Service to Include 2m and 6m with the CHALLENGER DX-V & DX-VI

Unique Multiband Antennas that Utilize the Patented GAP Elevated Launch Technology

The Revolution in Antenna Design

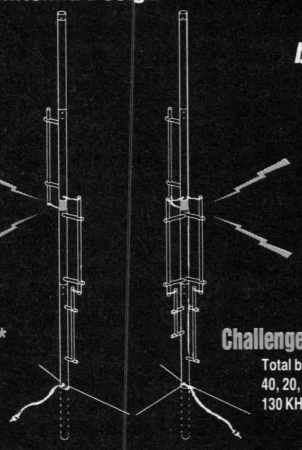

That . . .
- Launches RF from an elevated GAP
- Eliminates earth loss
- Comes pre-tuned, No adjustments necessary
- Uses 3 short radials @ 25 feet
- Assembles in less than 30 minutes
- Is self supporting w/drop in ground mount and is 31 feet high

but has NO!!!
- Traps
- Coils
- Transformers
- Baluns
- Resistors
- or Base Insulators

Challenger DX-V $199*
Total bandwidth on 40, 20, 15, 10, 6, 2 meters
80 KHz on 80 meters

Challenger DX-VI $219*
Total bandwidth on 40, 20, 15, 12, 10, 6, 2 meters
130 KHz on 80 meters

Best of all the *ENTIRE* antenna is always active!!

To Order Call—(407) 778-3728
*Plus shipping and handling
Florida residents add 6% tax

GAP
ANTENNA PRODUCTS
6010—Bldg J
N. Old Dixie Highway
Vero Beach FL 32967

CIRCLE 172 ON READER SERVICE CARD